Electrokinetic Soil Stabilization

Phase II: Testing with Water – First Runs; Lab Measurements & Simulation

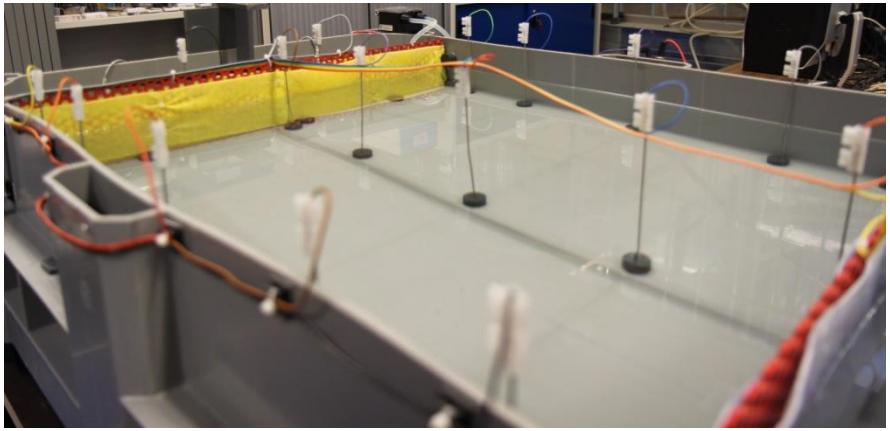

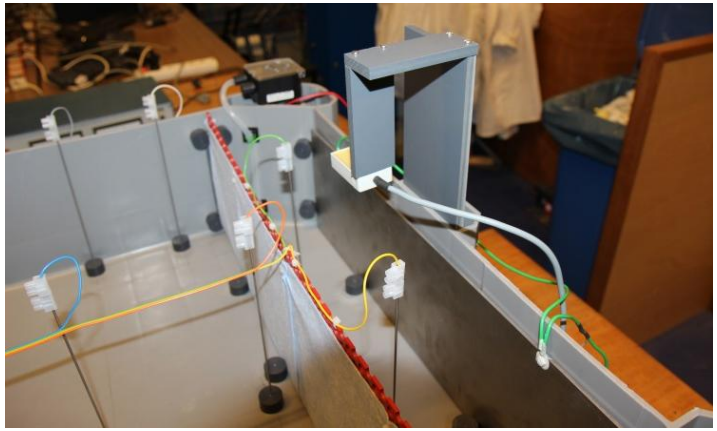

N.Pavlatos@tudelft.nl

Contents

Geometry/ Top View

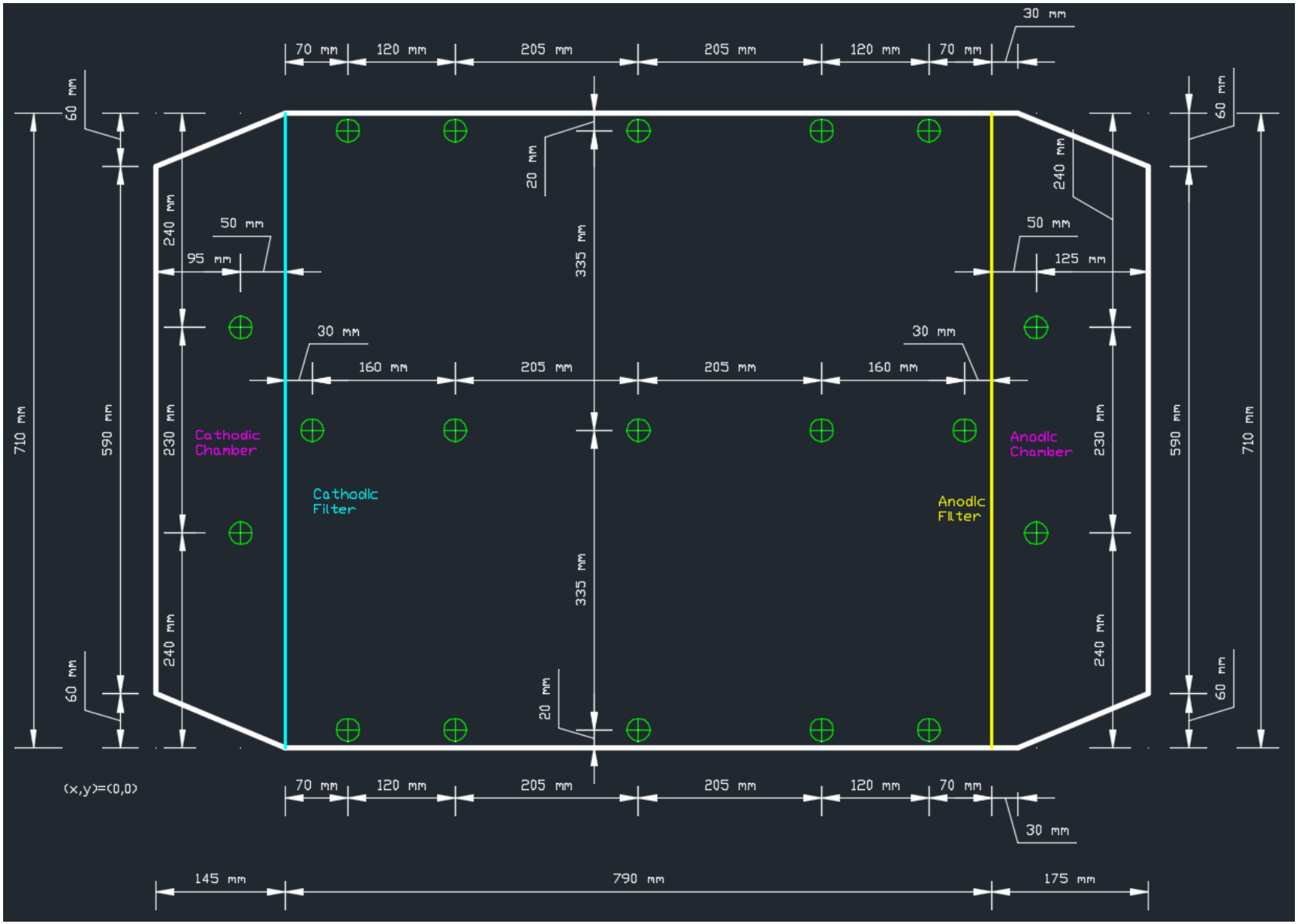

Geometry/ Side View

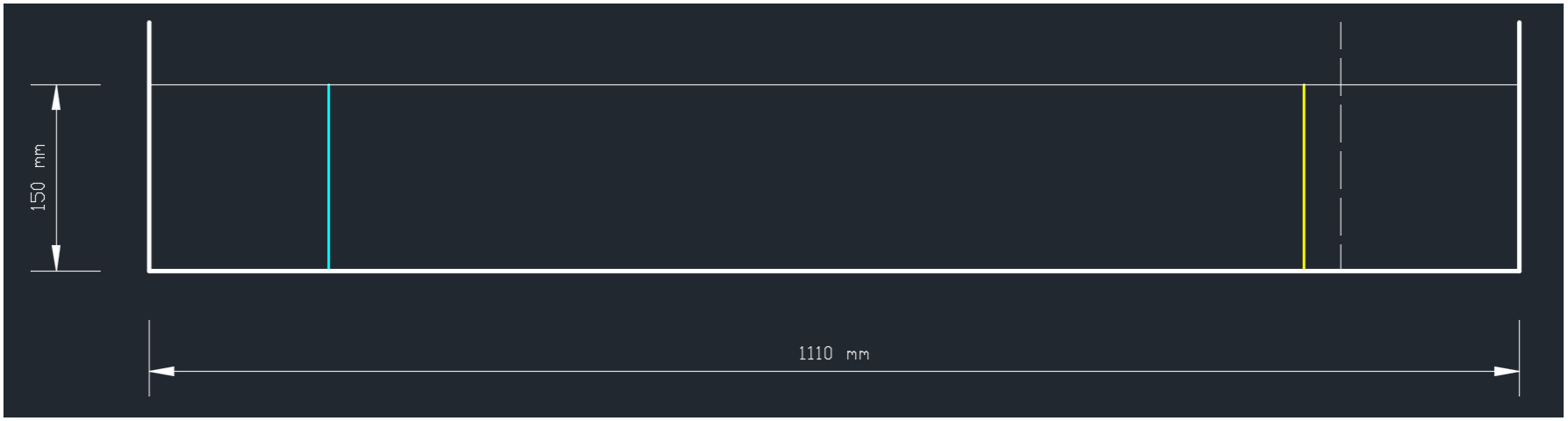

Configuration

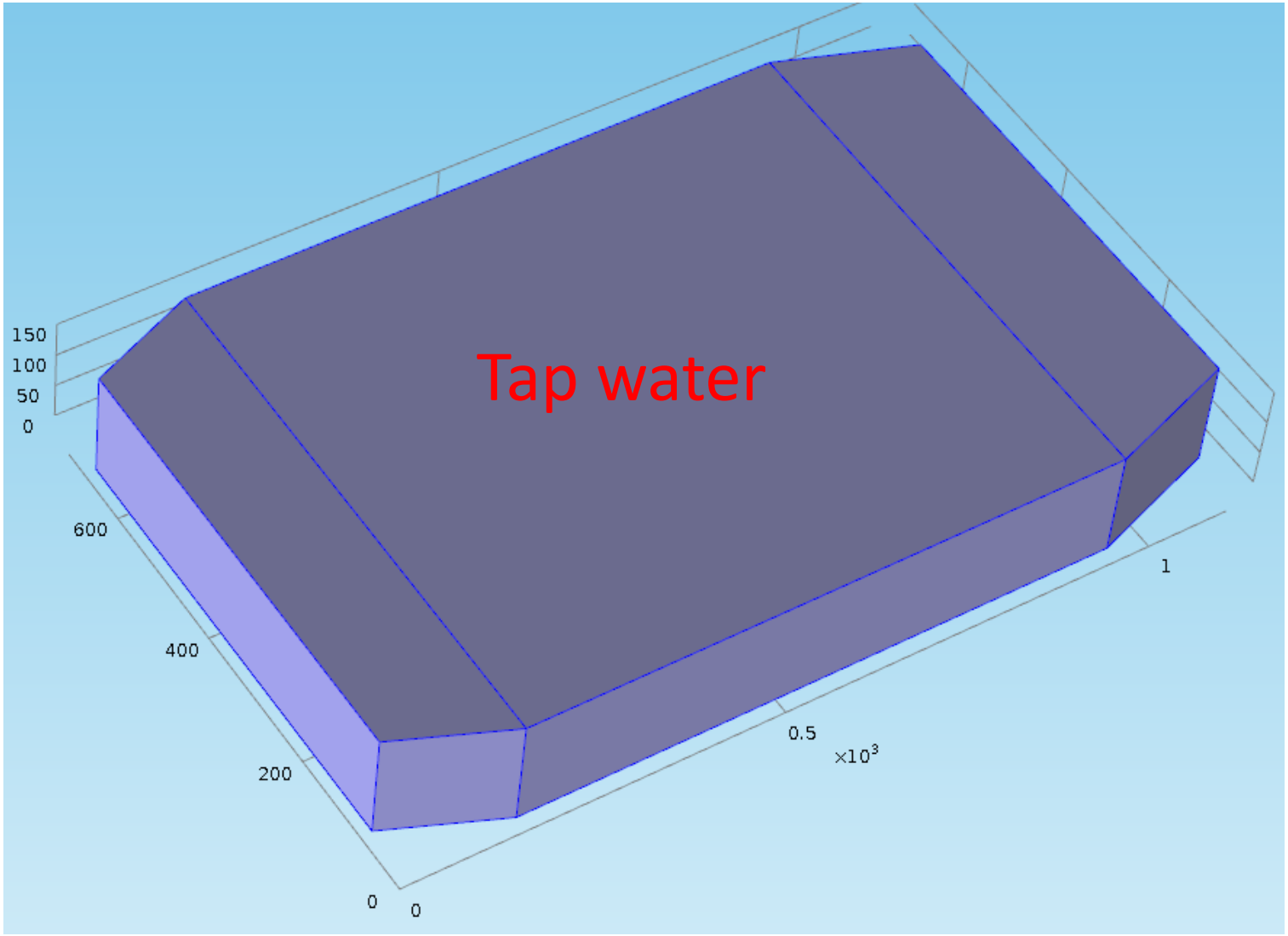

Configuration

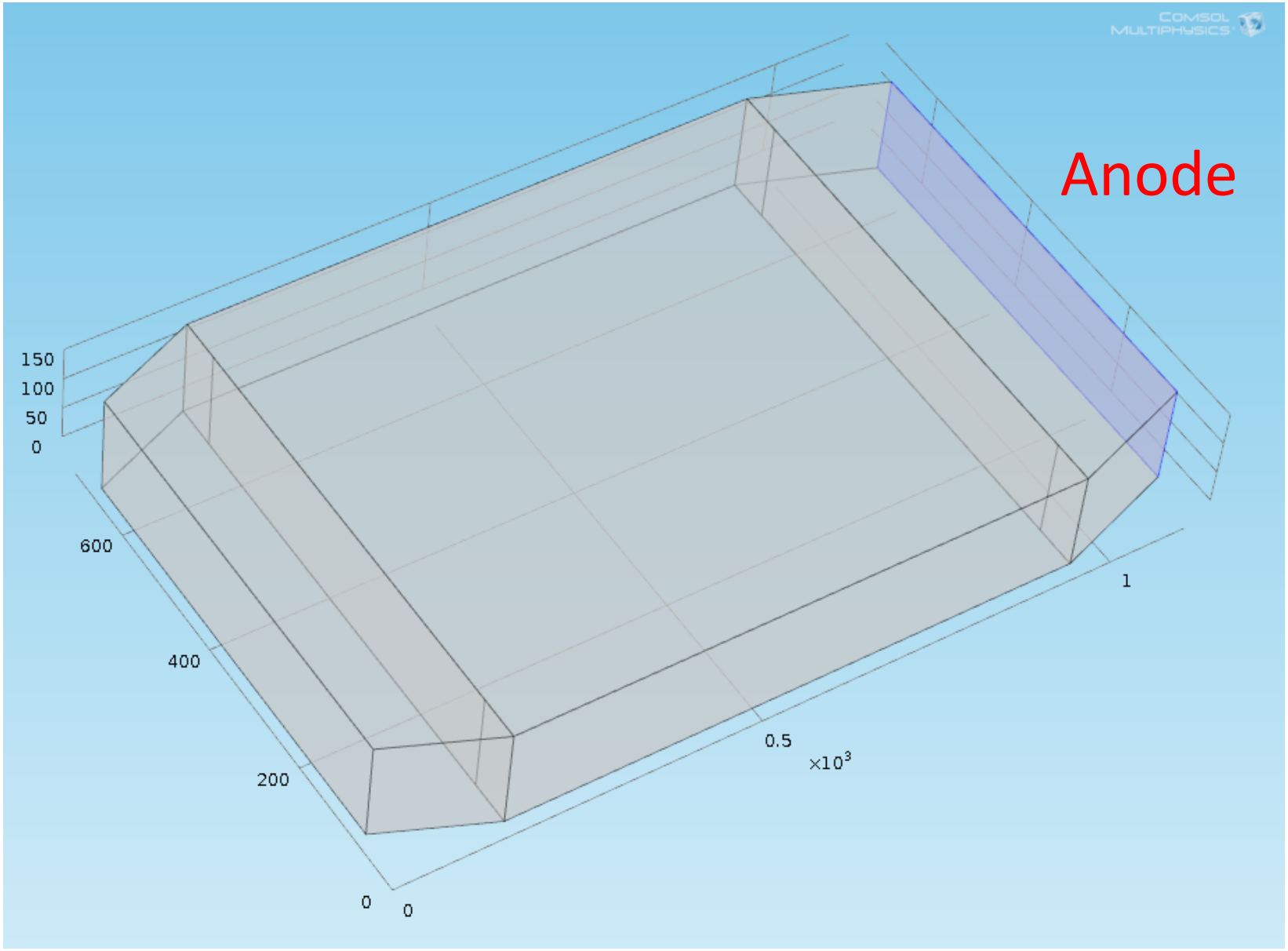

Configuration

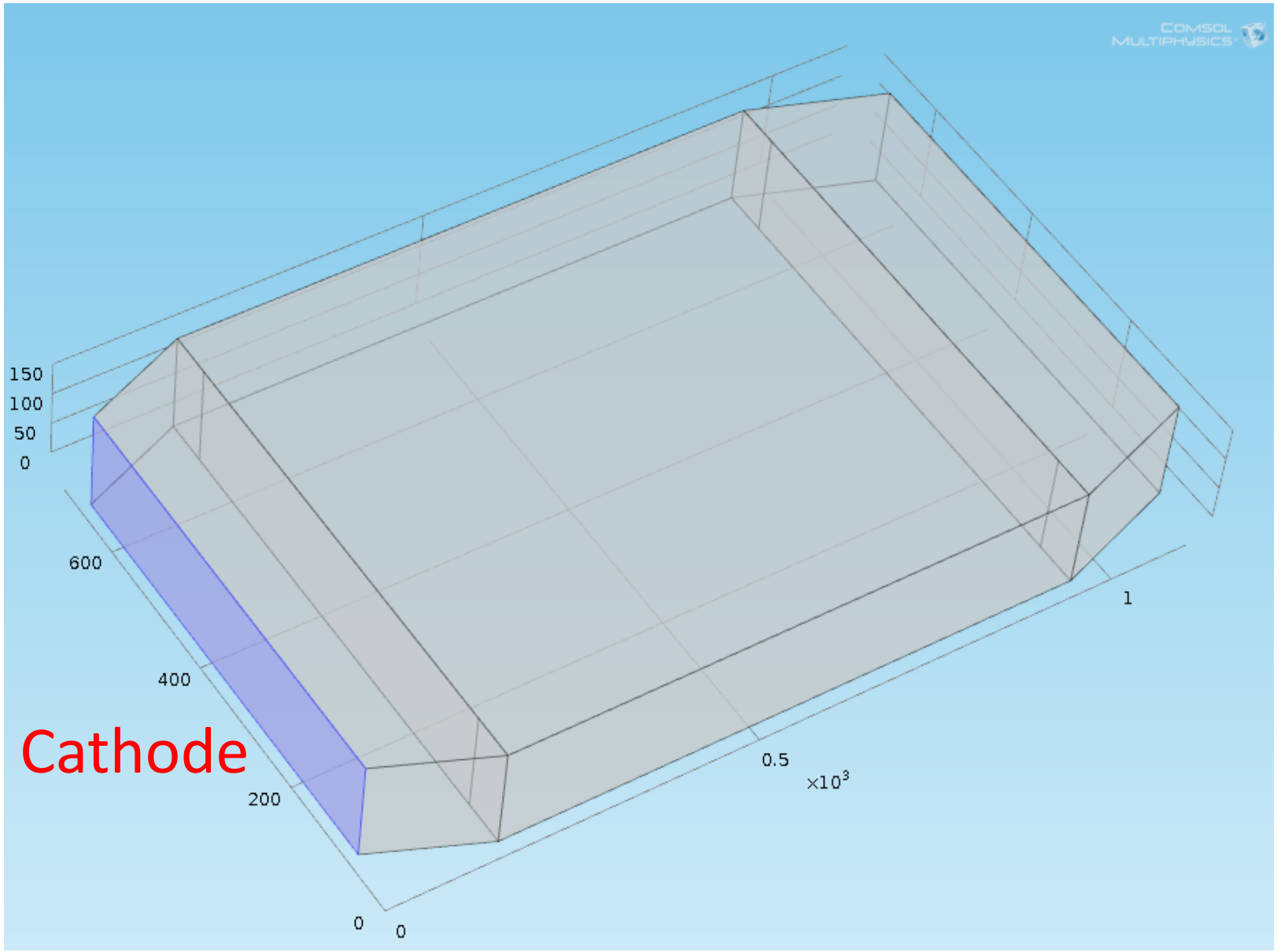

Governing Equations (Charge Conservation Law)

$$\frac{\partial \rho_c}{\partial t} + \nabla \cdot \underline{J} = 0$$

$$\frac{\partial \rho_c}{\partial t} = 0$$ For steady currents

$$\nabla \cdot \underline{J} = 0$$

ρ_c: Charge density

t: Time

$\underline{J}$: Current density, vector

Governing Equations (Charge Conservation Law)

$$\nabla \cdot \underline{J} = 0$$

$$\underline{J} = k\,\underline{E}$$

Ohm's Law

$$\underline{E} = -\nabla V$$

$$\underline{J} = -k\nabla V$$

$$\nabla \cdot (-k\,\nabla V) = 0 \quad \rightarrow \quad \boldsymbol{-k\,\nabla^2 V = 0}$$

k: Assumed constant

k: Electrical conductivity

$\underline{E}$: Electric field, vector

V: Electric potential

Boundary Conditions (B. C. ‘s)

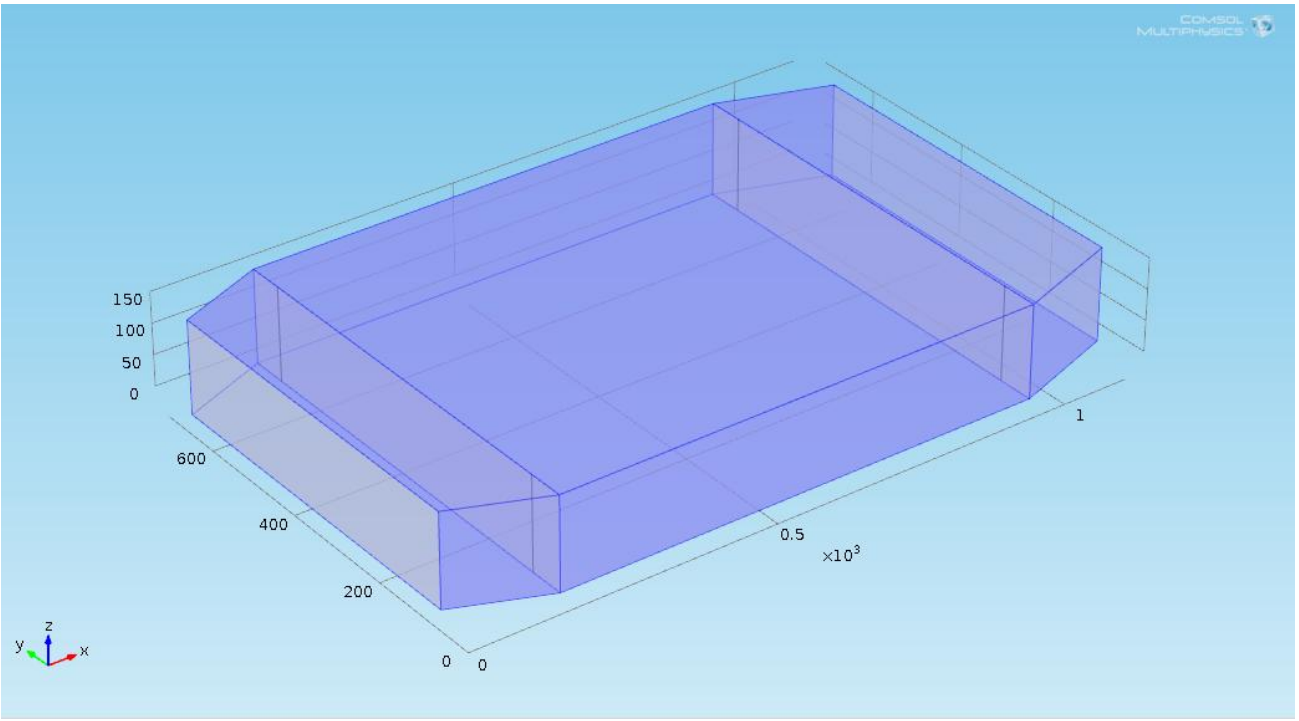

No Flux B. C. :

$$-\underline{\hat{n}} \cdot \underline{J} = \underline{\hat{n}} \cdot k\nabla V = 0$$

$\underline{\hat{n}}$: Unit vector normal to the boundary area

Boundary Conditions (B. C. ‘s)

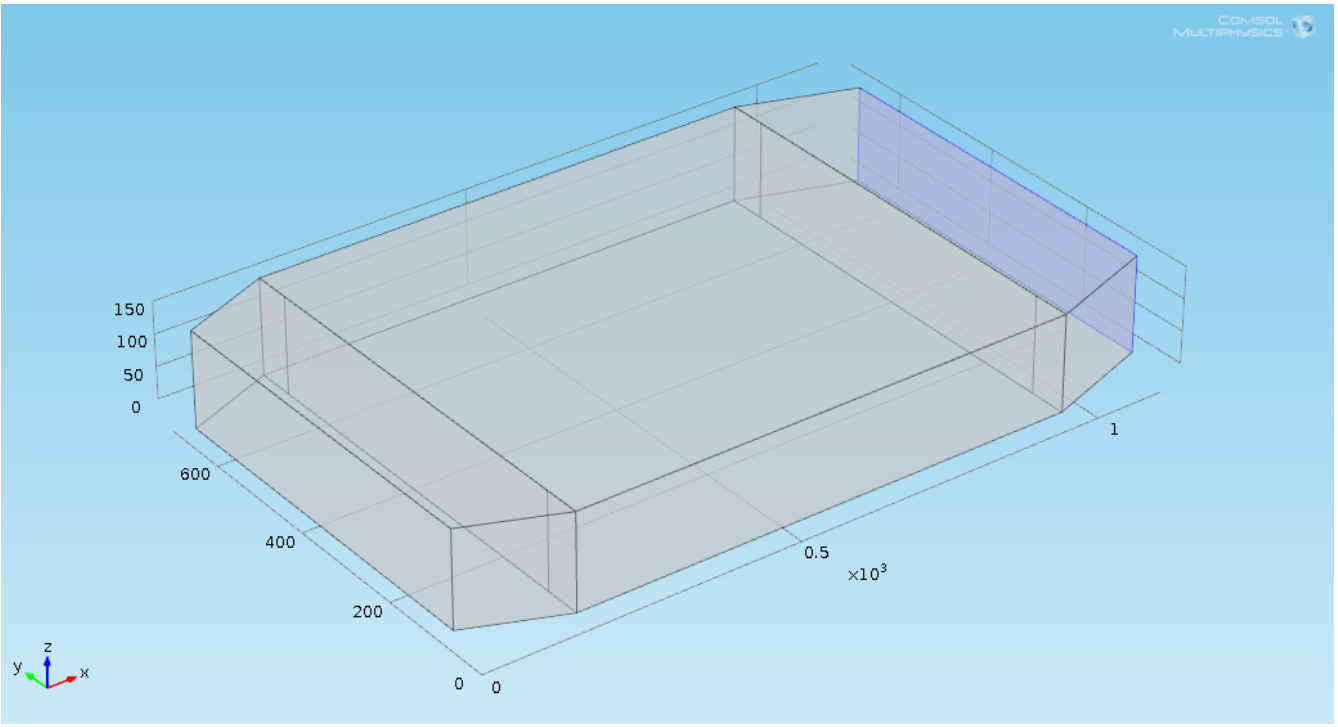

Dirichlet B. C. :

$$V = V_{anode}$$

Boundary Conditions (B. C. ‘s)

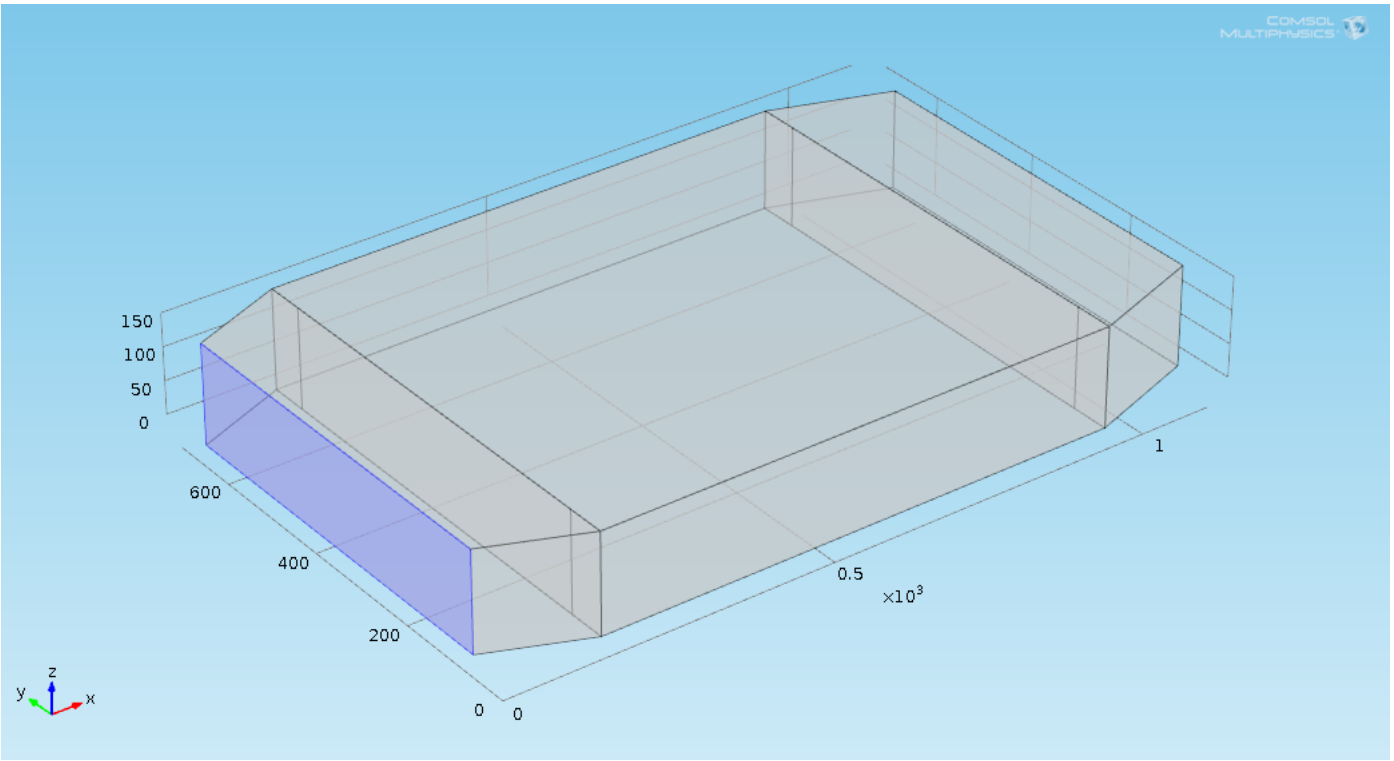

Dirichlet B. C. :

$$V = V_{cathode}$$

Mesh

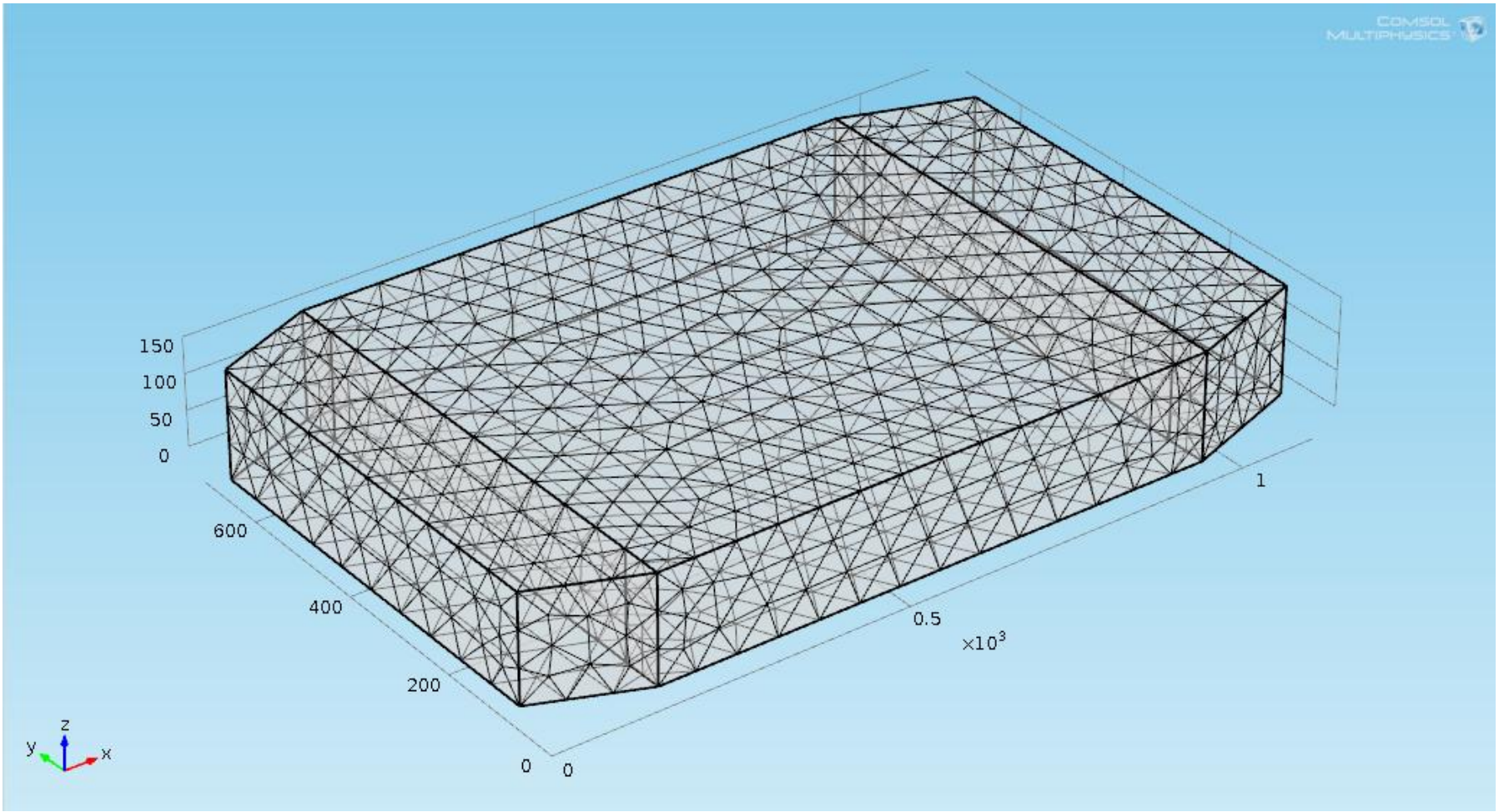

Input

$V_{anode} =$ 39.99 [V]

$V_{cathode} =$ 0 [V]

$k =$ 0.045 [S/m] = 45 [mS/m]

(Based on average values provided by water supplier company on their website)

Simulation Results

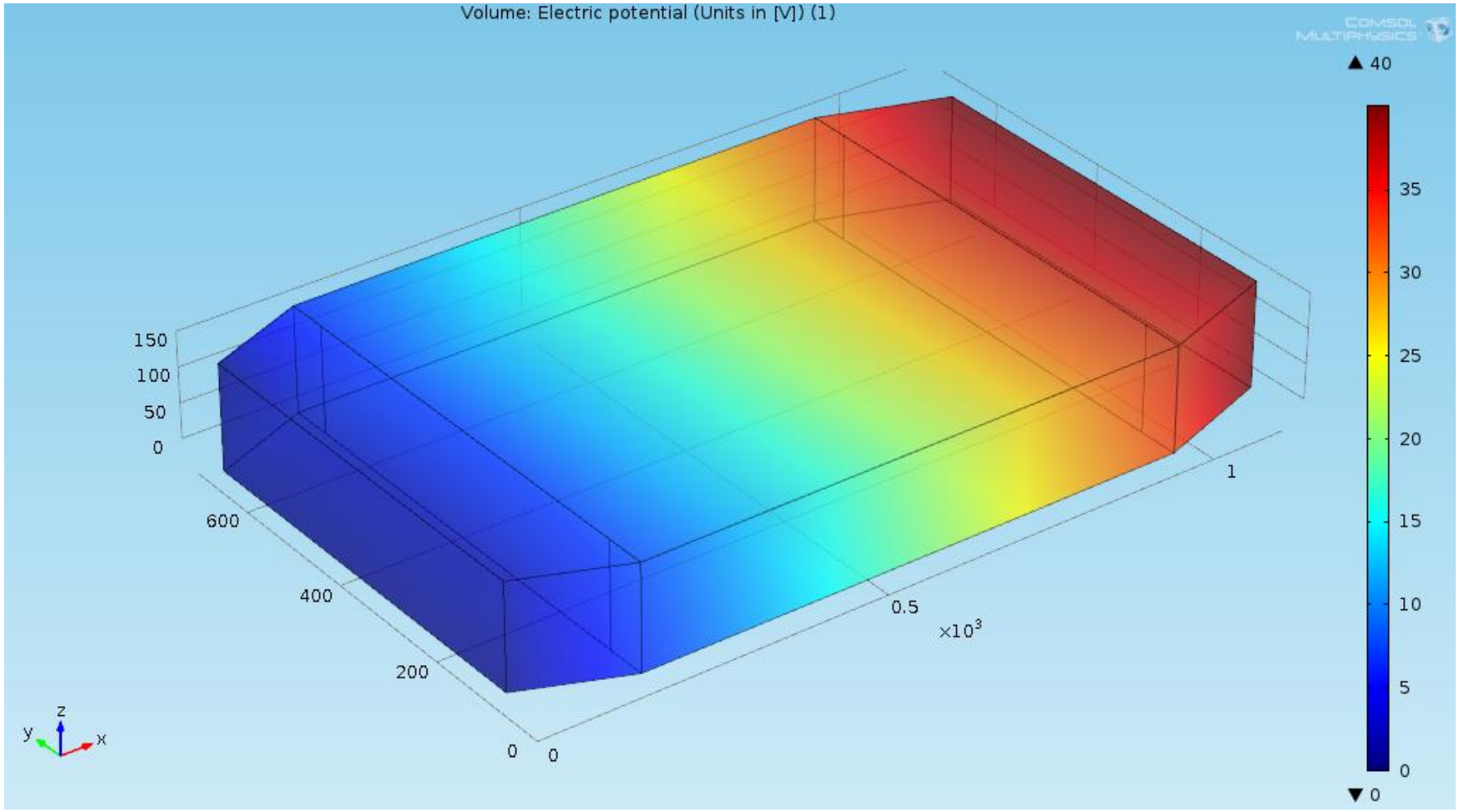

Electric Potential [V]

Simulation Results

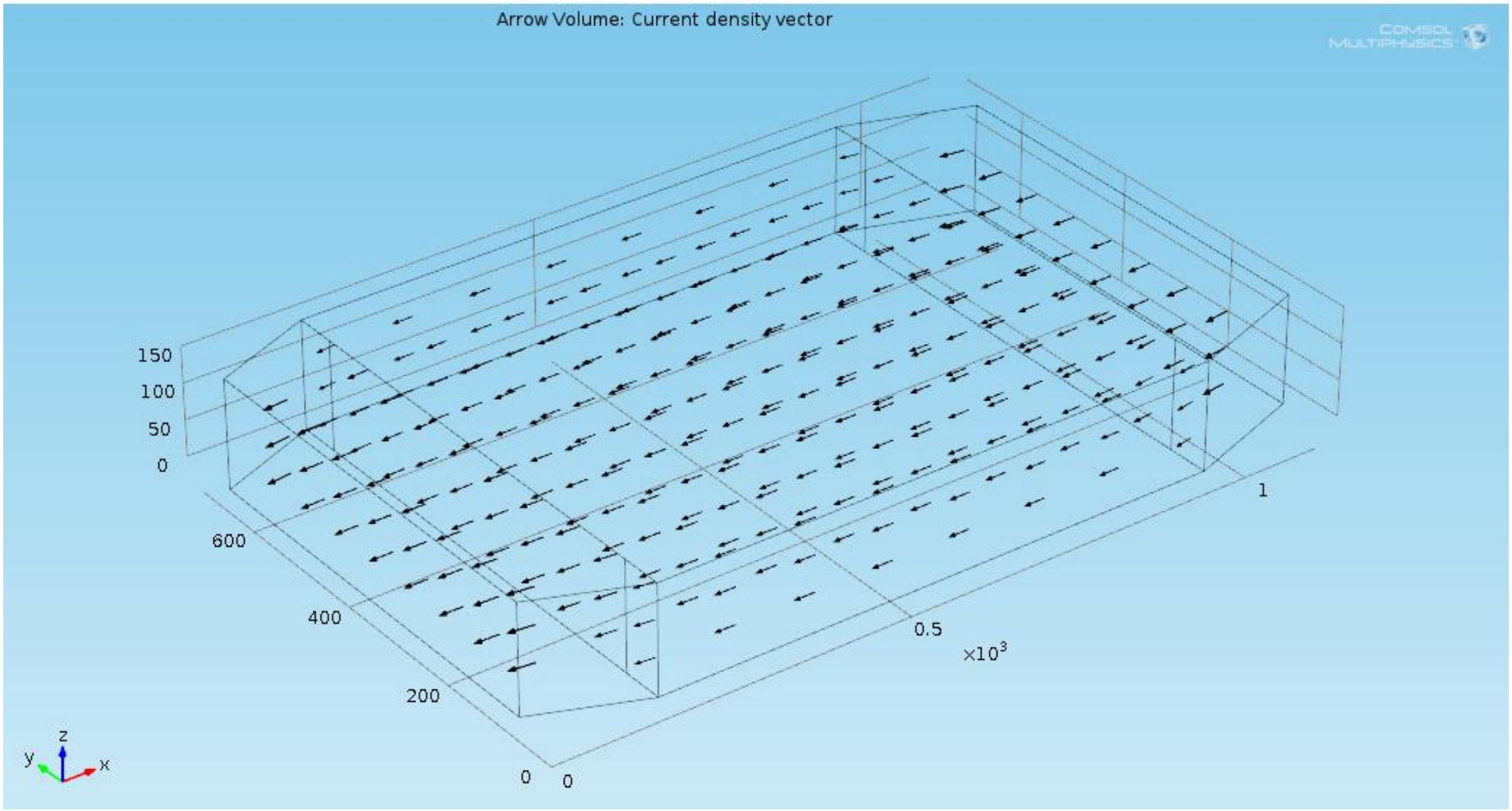

Current Density Vector [A/m^2]

Simulation Results

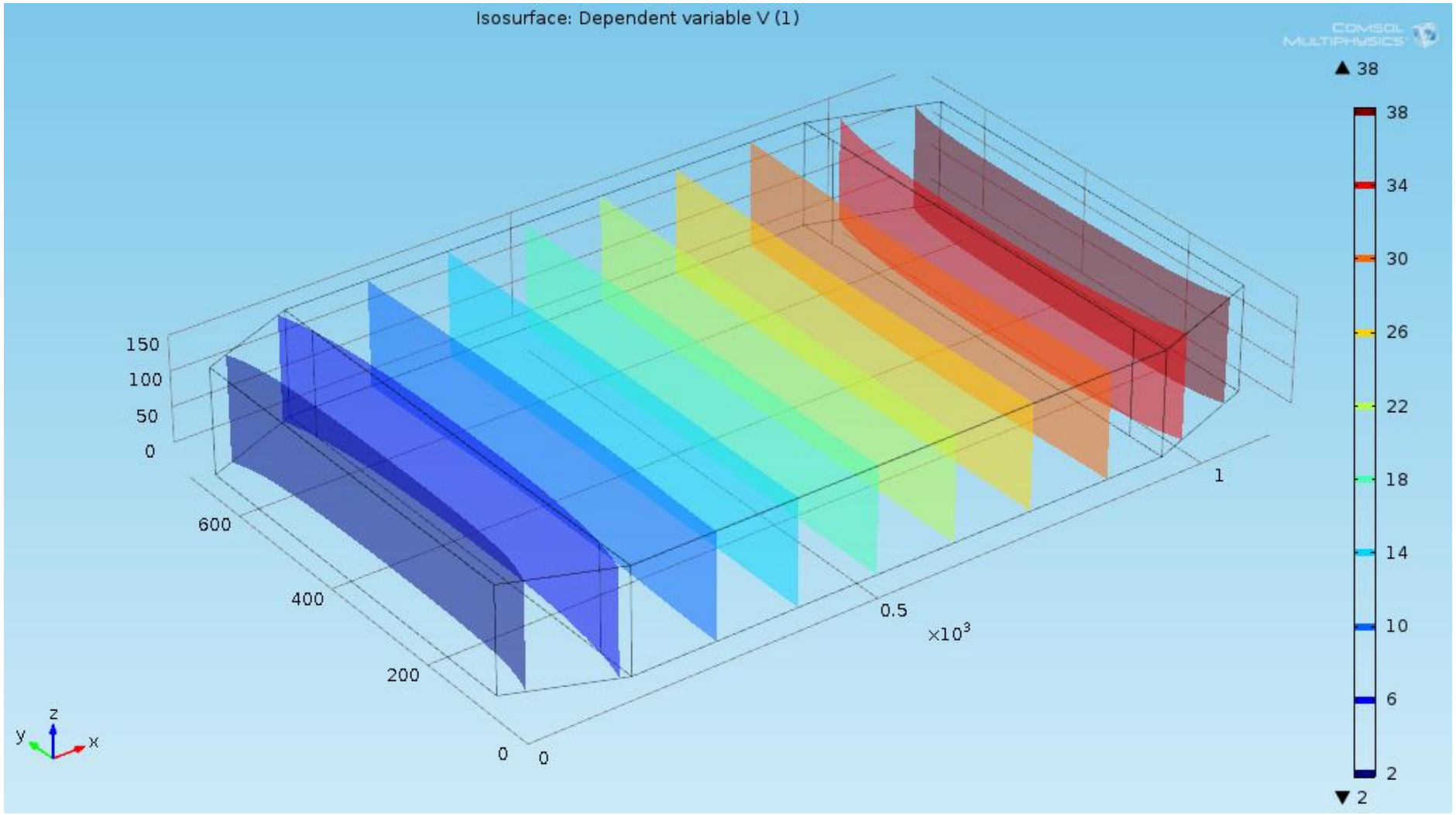

Electric Potential [V] - Isosurface

Simulation Results

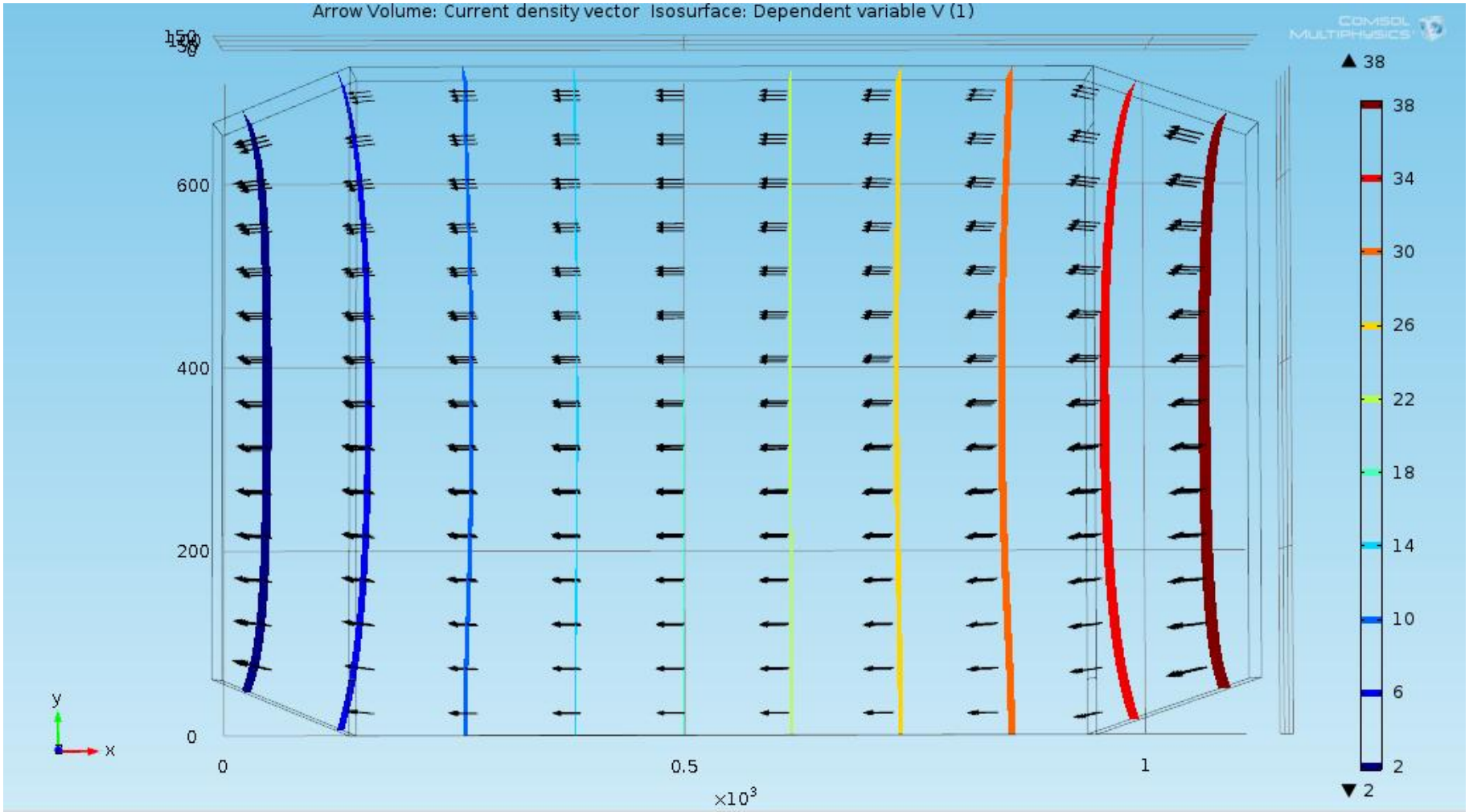

1) Electric Potential [V] – Isosurface
2) Current Density Vector [A/m^2]

Simulation Results

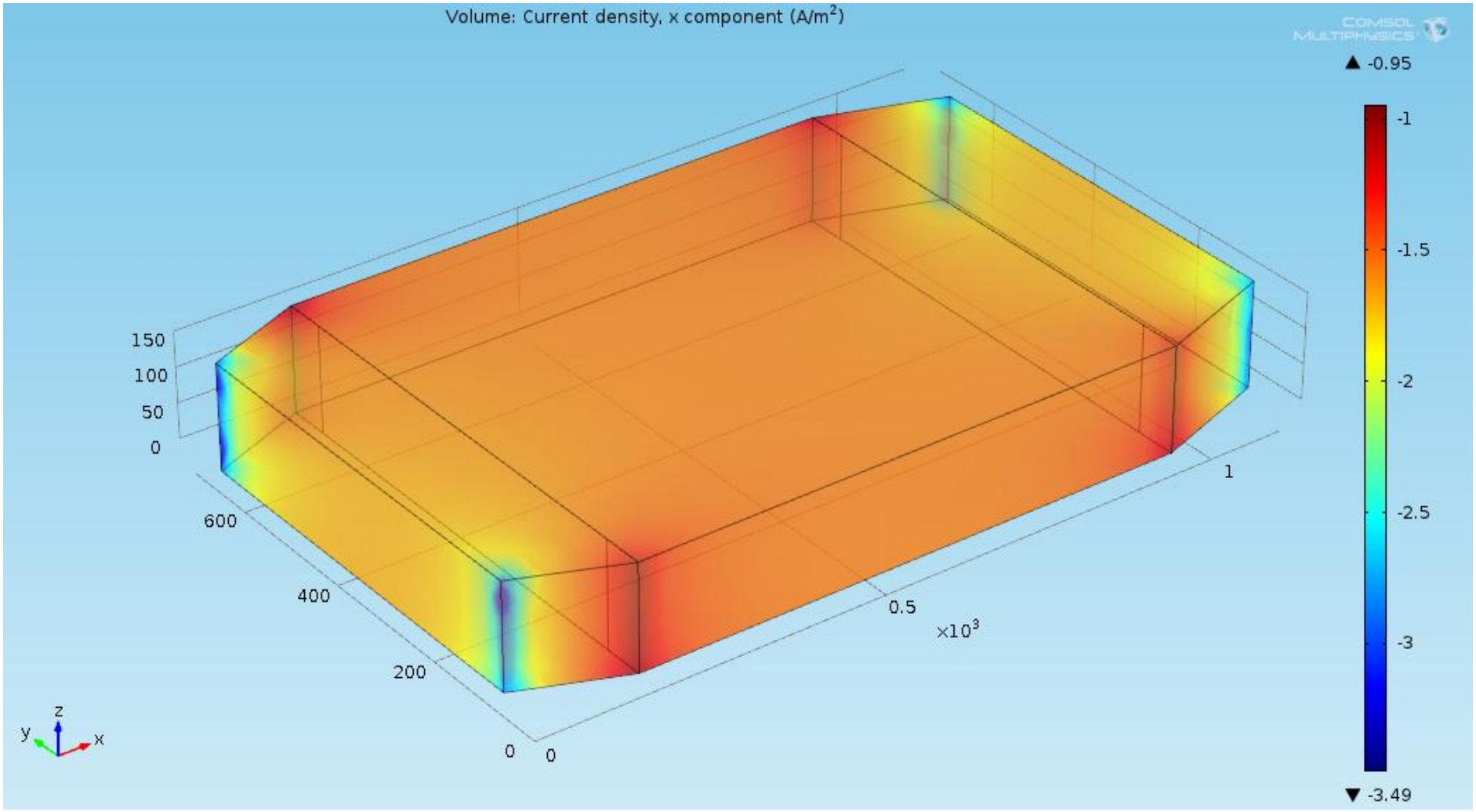

Current Density Vector; x - Component [A/m²]

Simulation Results

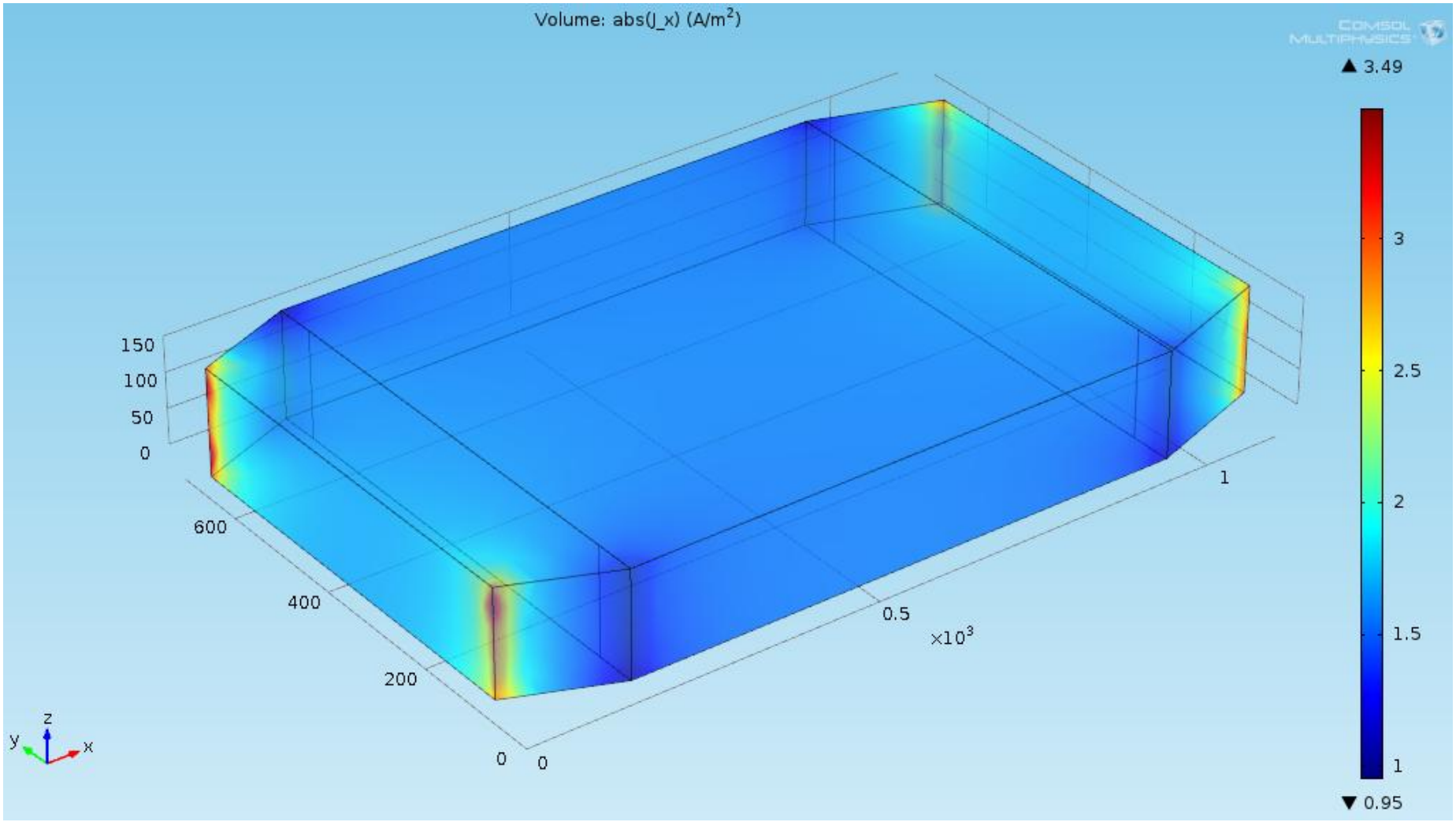

Current Density Vector; x - Component ; Absolute Value [A/m^2]

Simulation Results

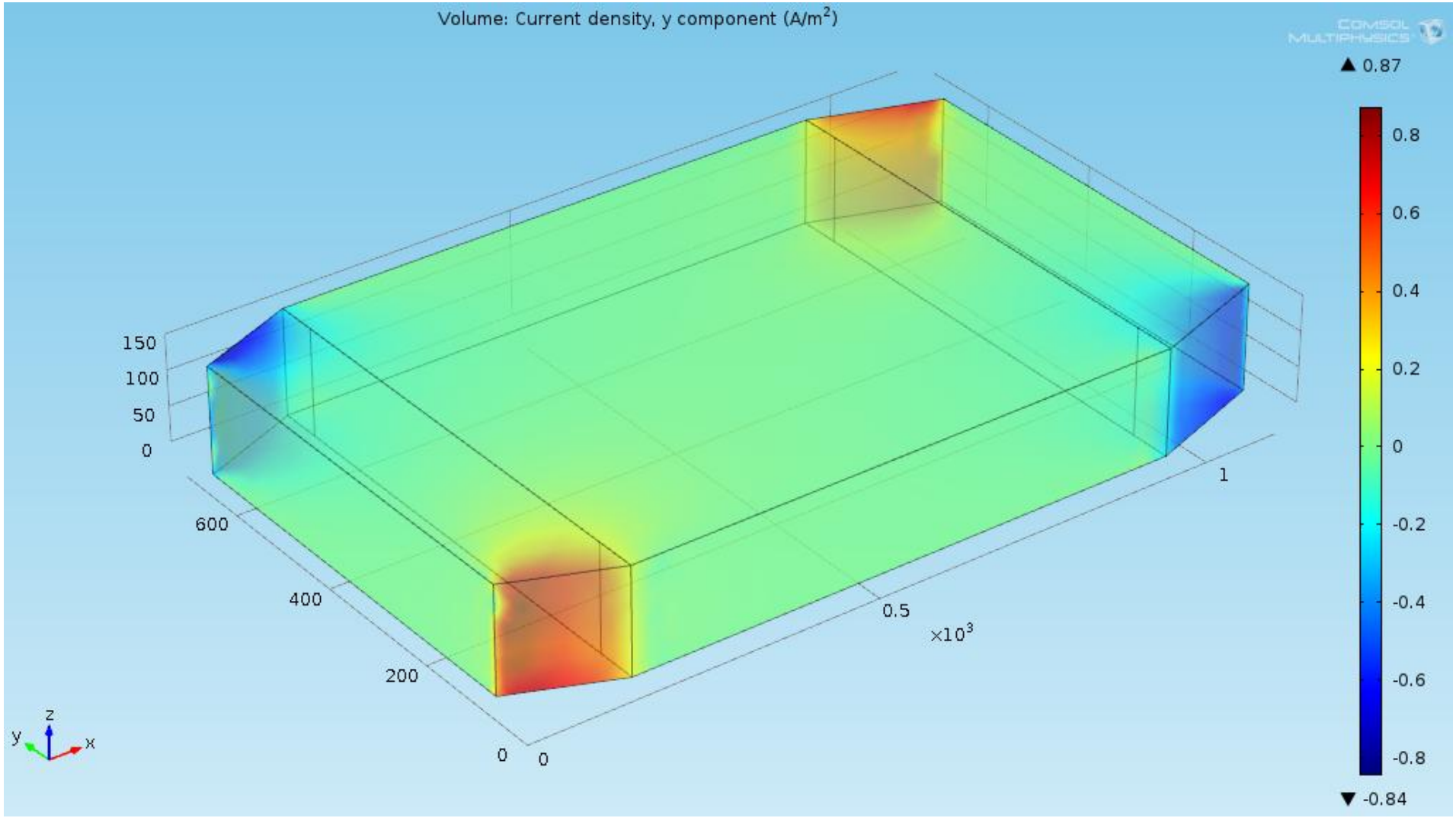

Current Density Vector; y - Component [A/m²]

Simulation Results

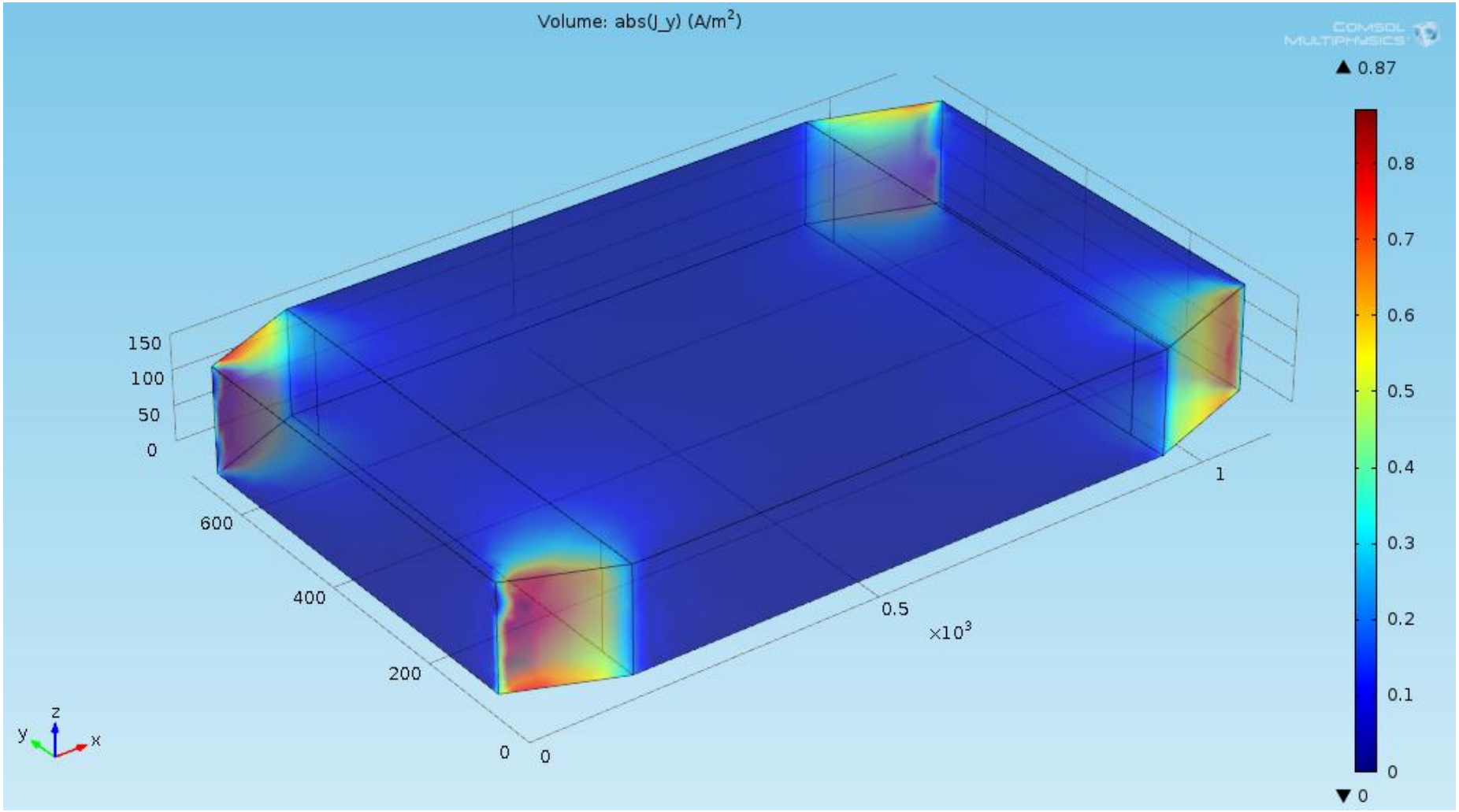

Current Density Vector; y - Component ; Absolute Value [A/m^2]

Simulation Results

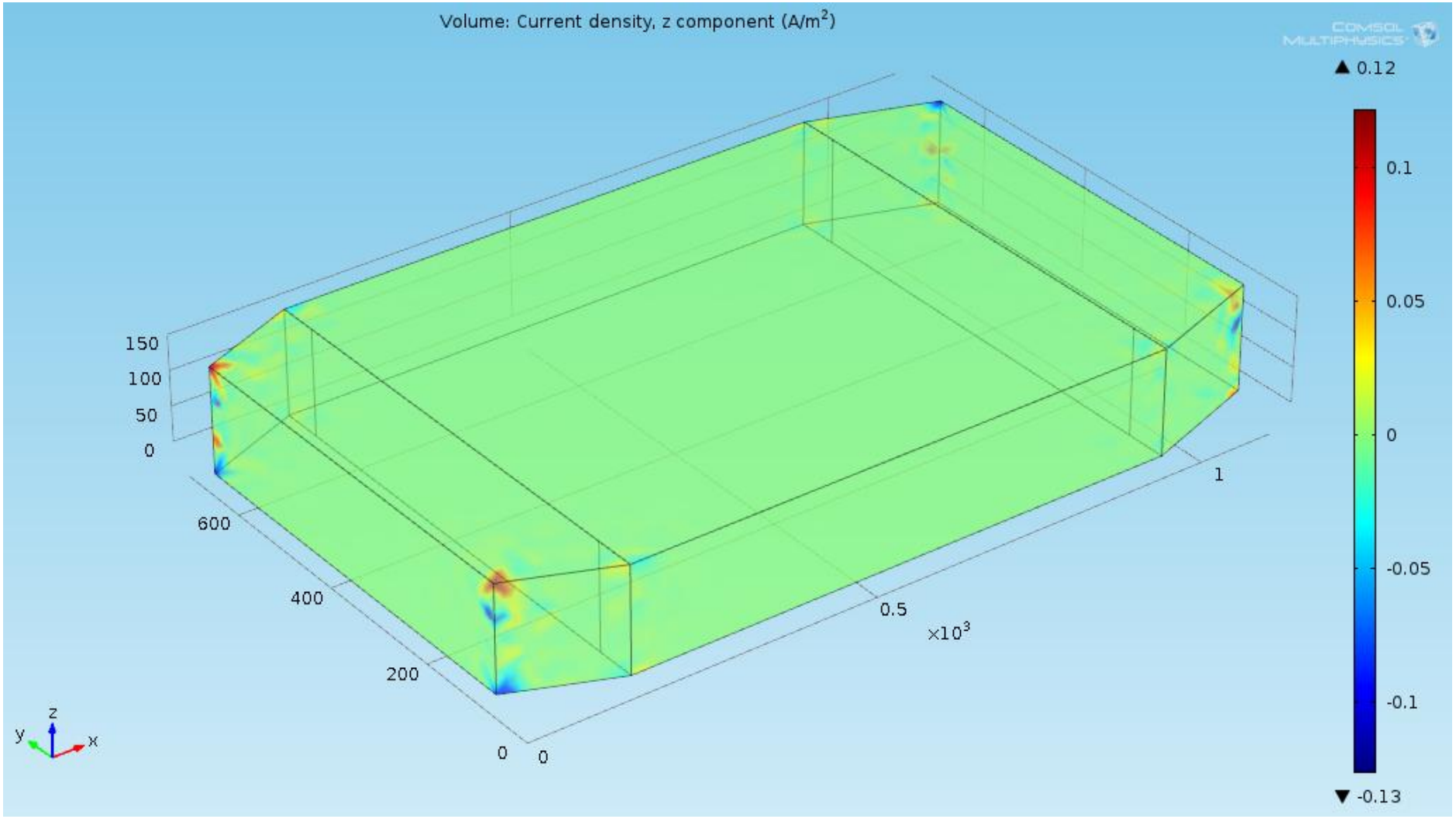

Current Density Vector; z - Component [A/m^2]

Simulation Results

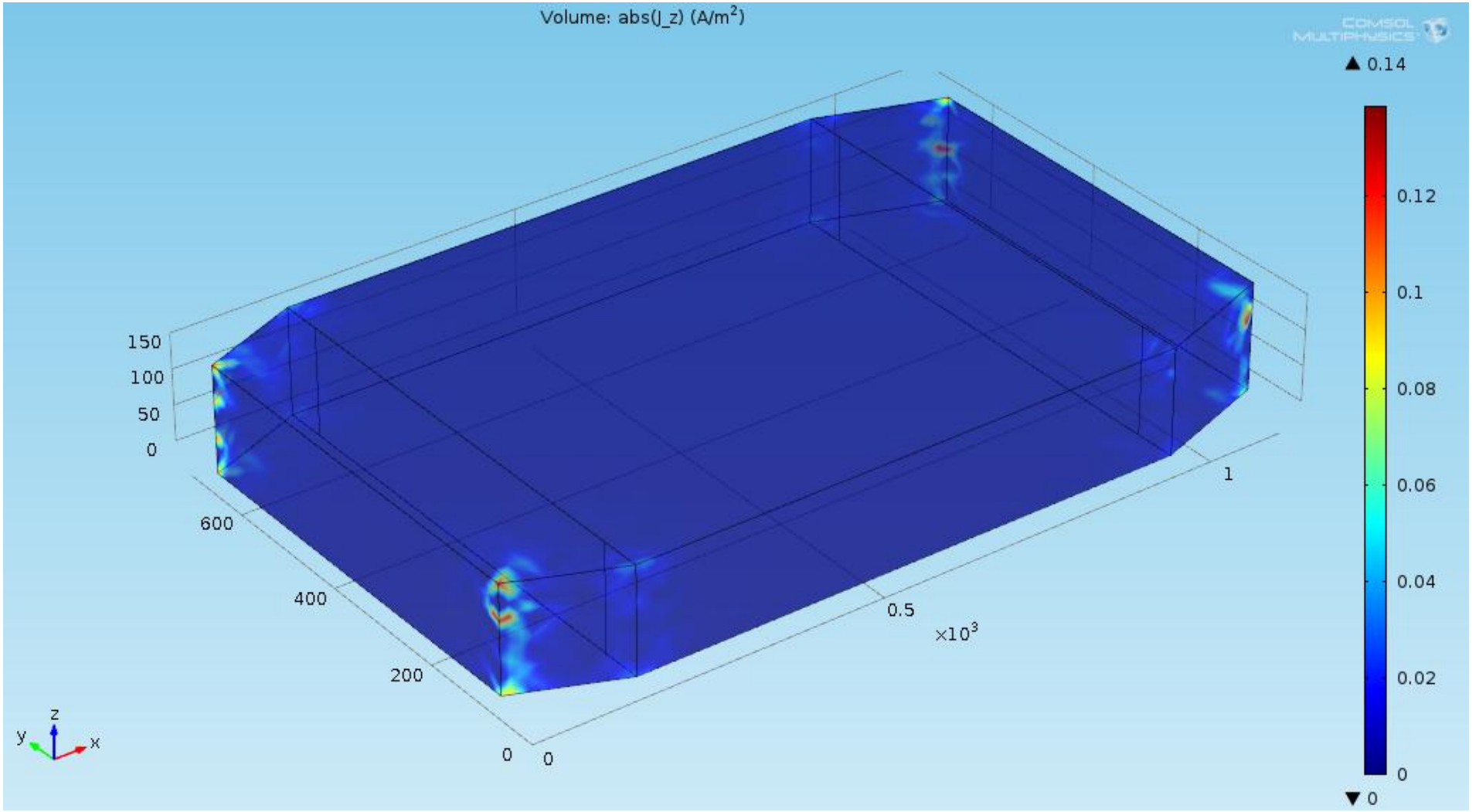

Current Density Vector; z - Component ; Absolute Value [A/m^2]

Simulation Results – Creating Sub Data Sets

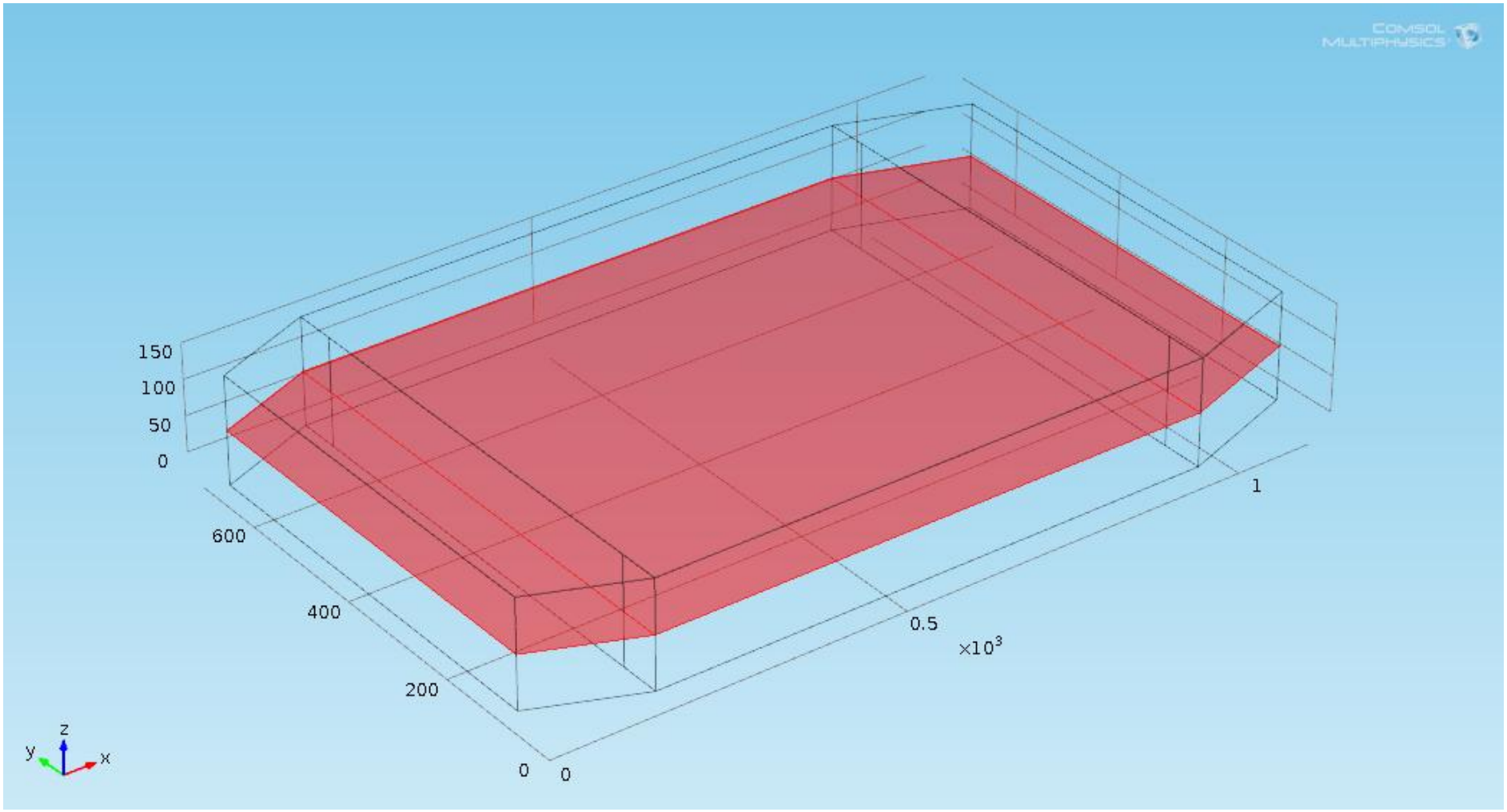

Creating x-y surface at z = 75 mm

Simulation Results – Creating Sub Data Sets

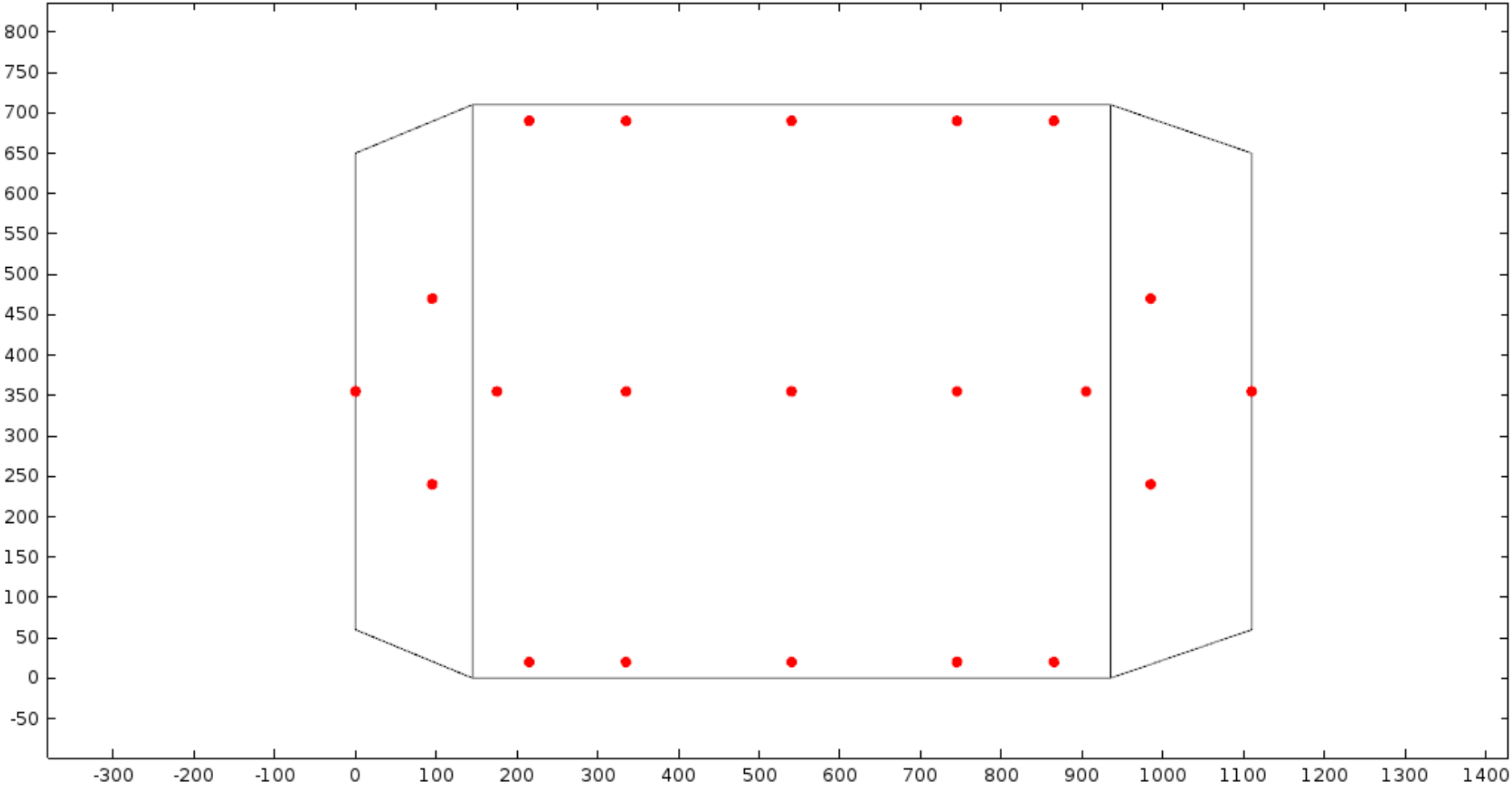

Creating points on the x-y surface taken at z = 75 mm.
19 points at the exact x, y coordinates of the passive electrodes.
2 representative points in the middle of the anode and the cathode.

Measured Vs. Simulation

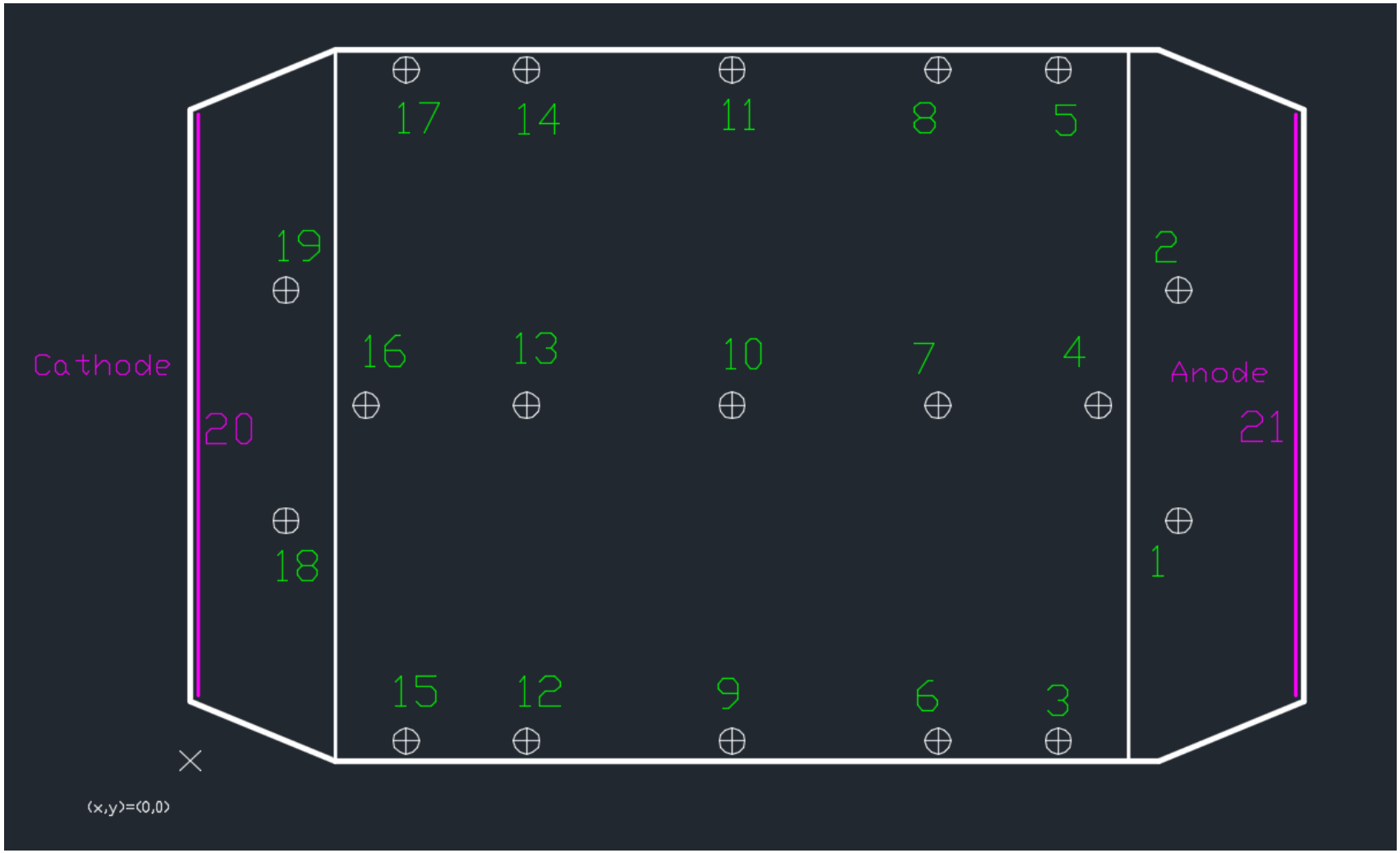

Numbering of electrodes

Measured Vs. Simulation

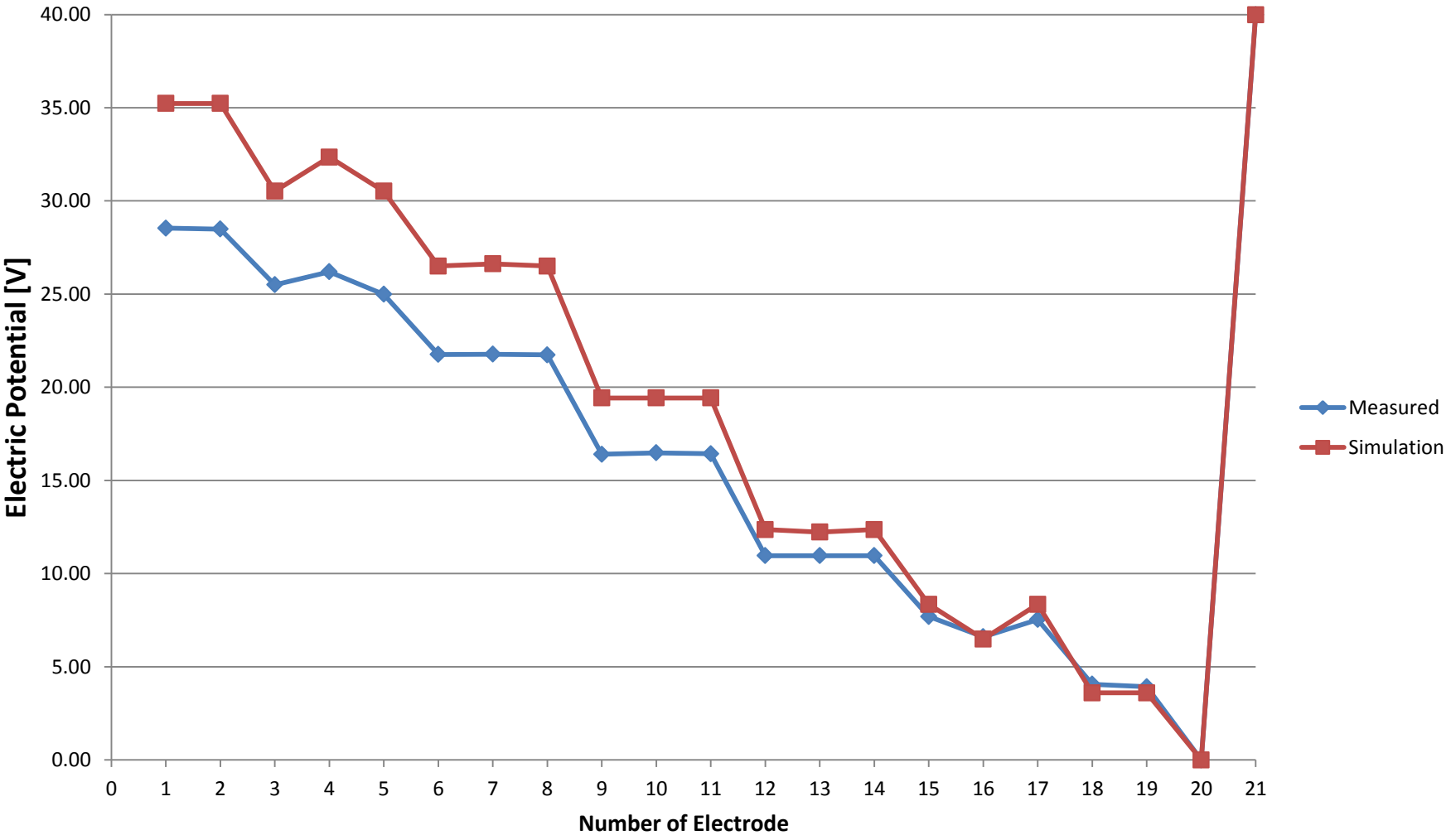

Electric potential at different electrodes [V]

Measured Vs. Simulation

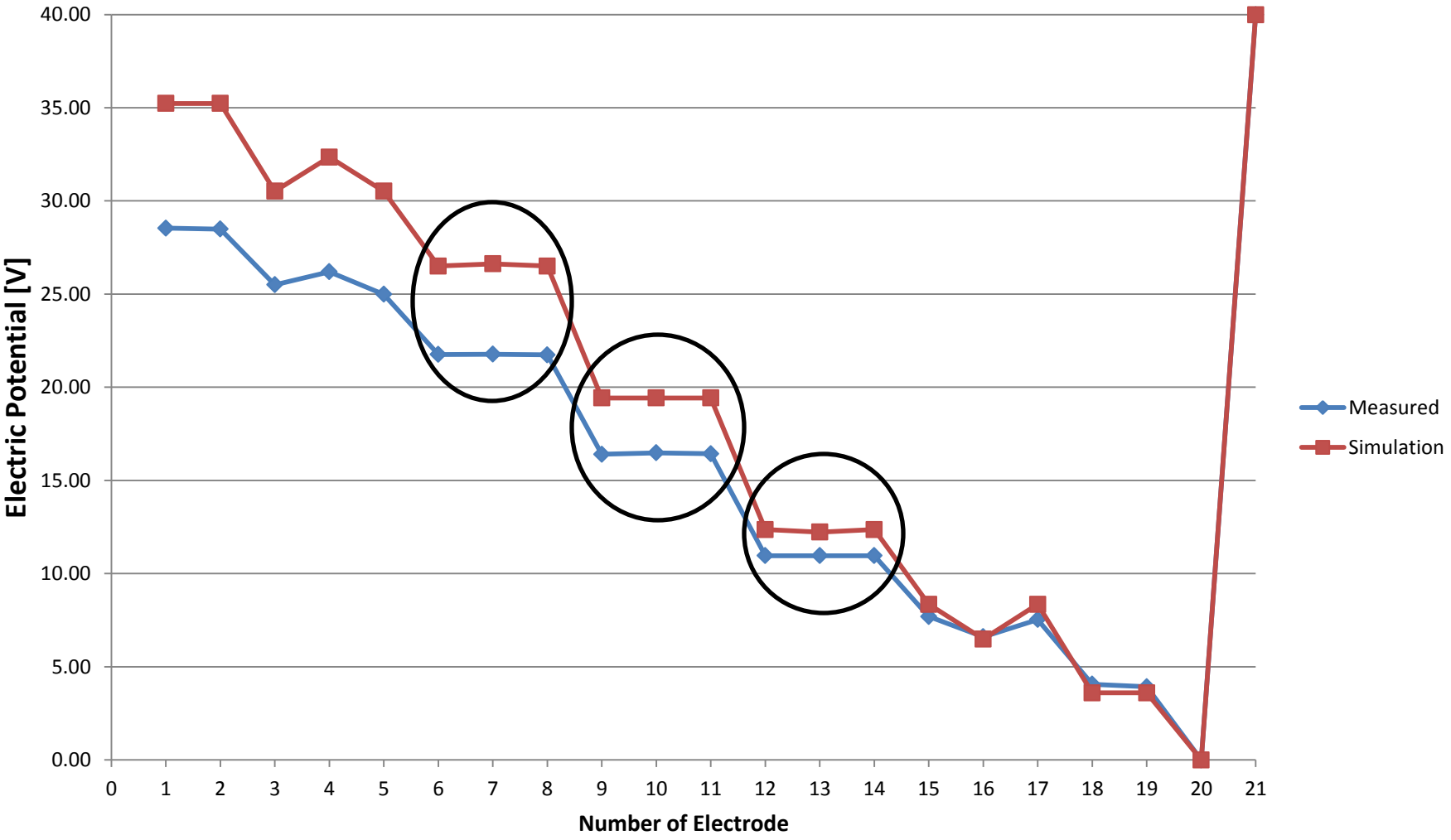

Electric potential at different electrodes [V]

Measured Vs. Simulation

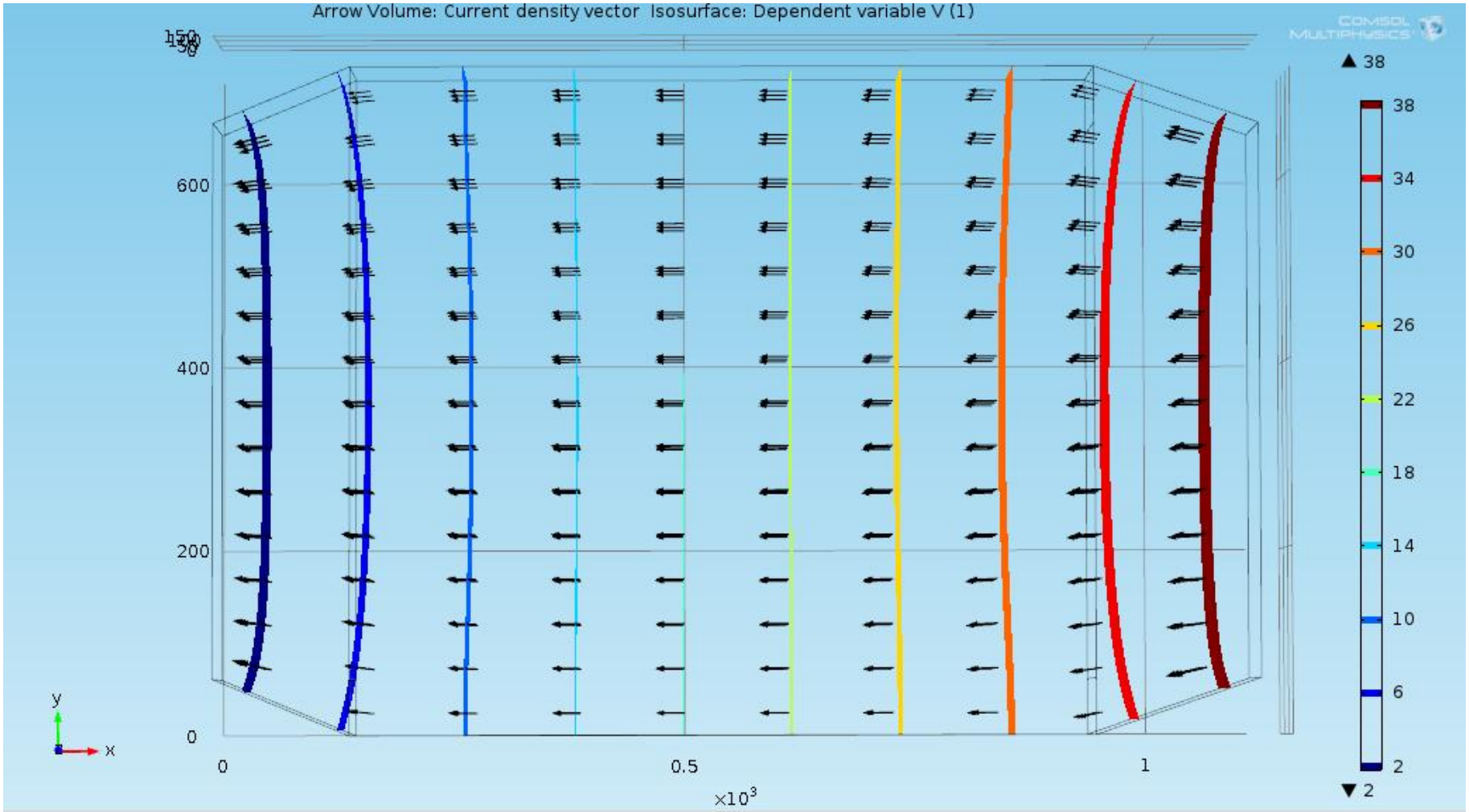

1) Electric Potential [V] – Isosurface
2) Current Density Vector [A/m^2]

Measured Vs. Simulation

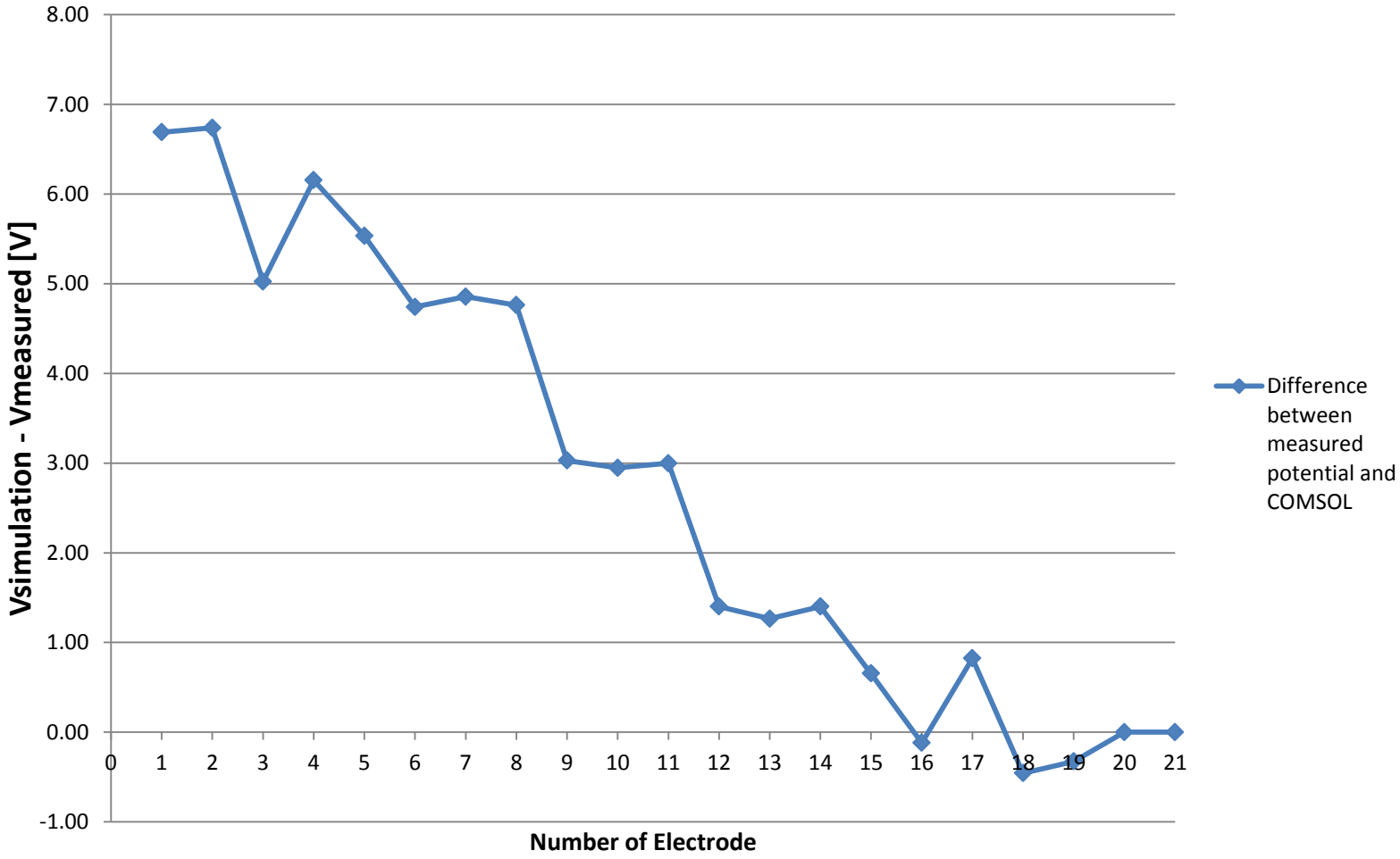

Difference between the electric potential resulting from the simulation and the electric potential resulting from the measurements [V]

Measured Vs. Simulation

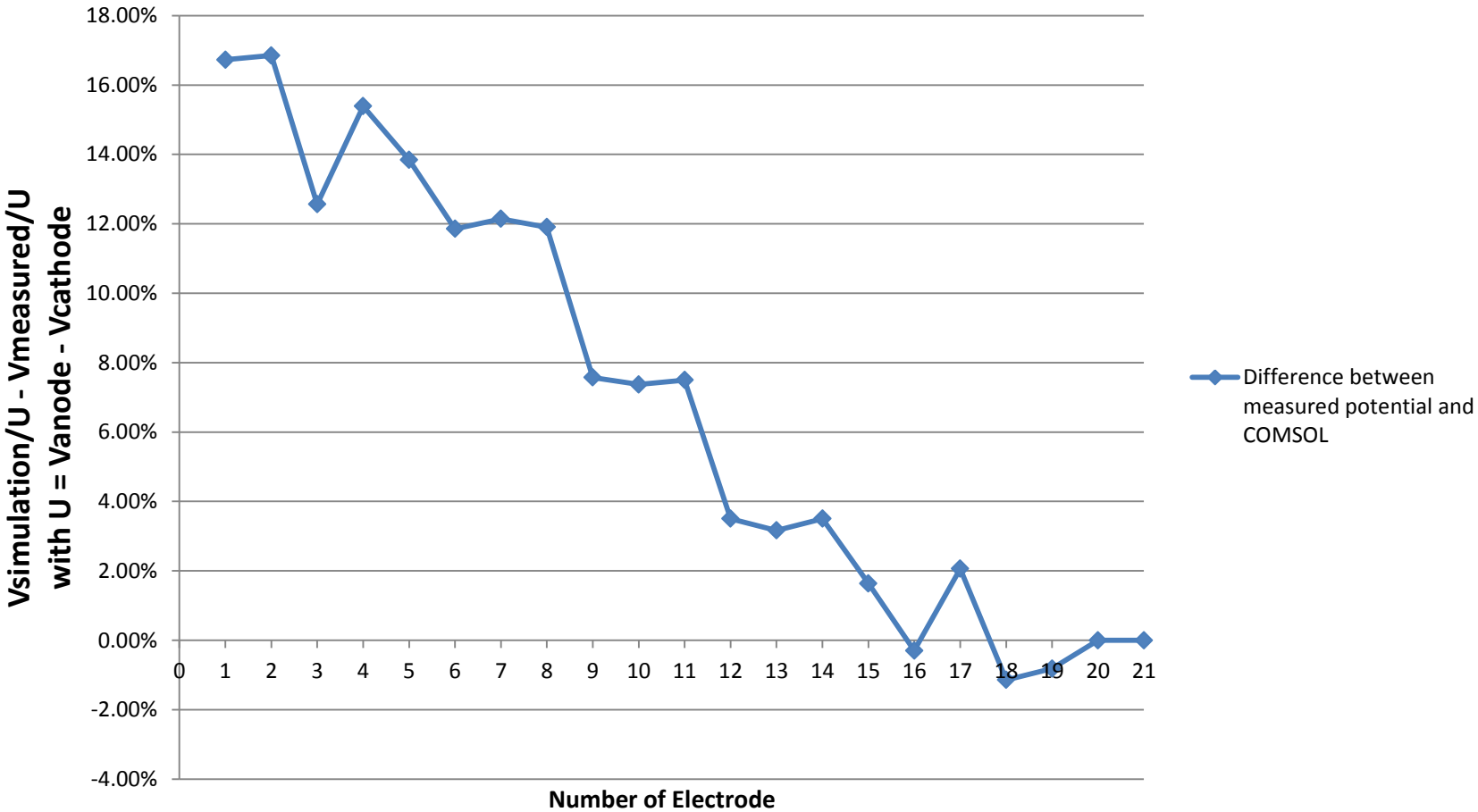

Normalized difference between the electric potential resulting from the simulation and the electric potential resulting from the measurements. U = Vanode – Vcathode used for the normalization. [-], [%]

Measured Vs. Simulation

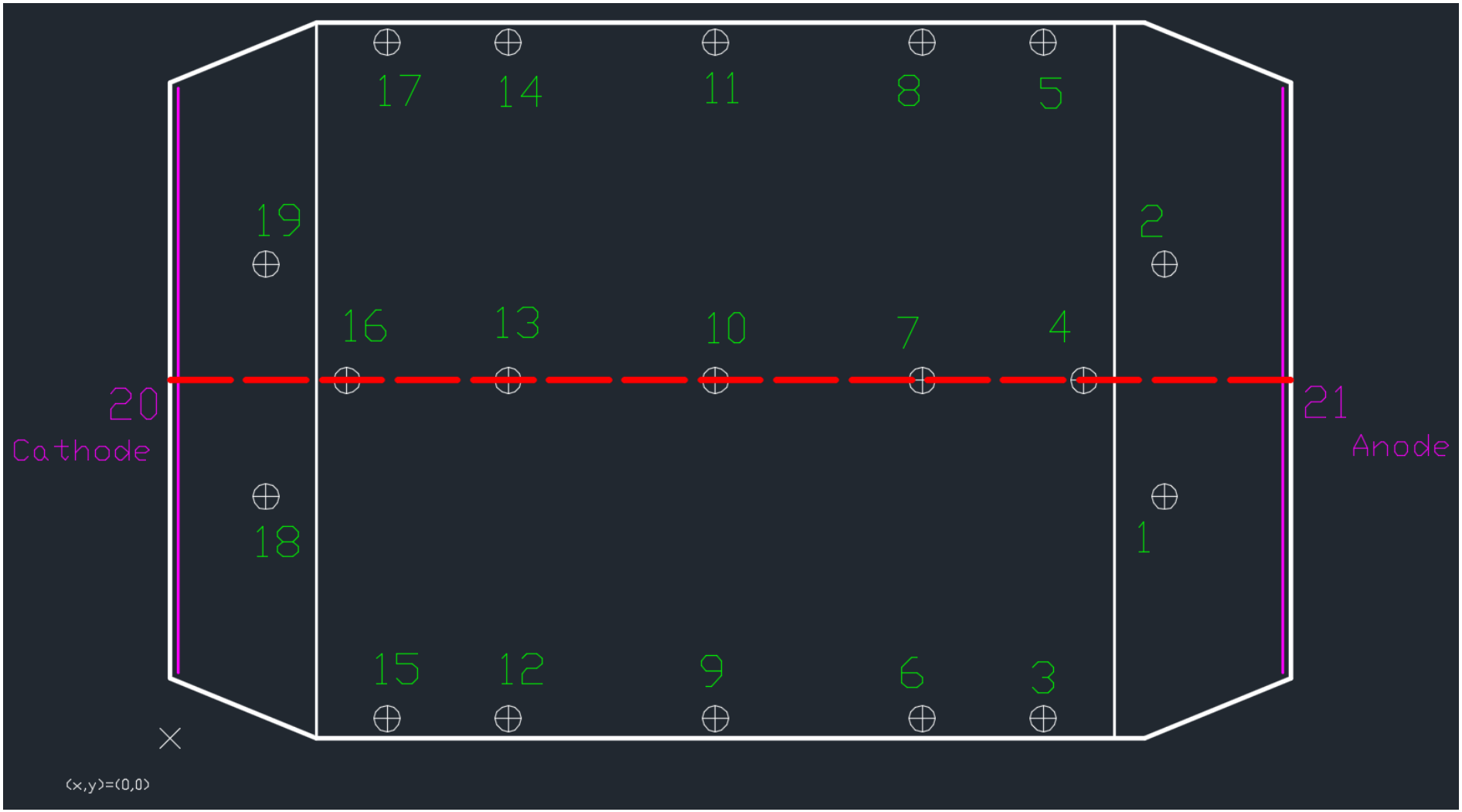

Measured Vs. Simulation

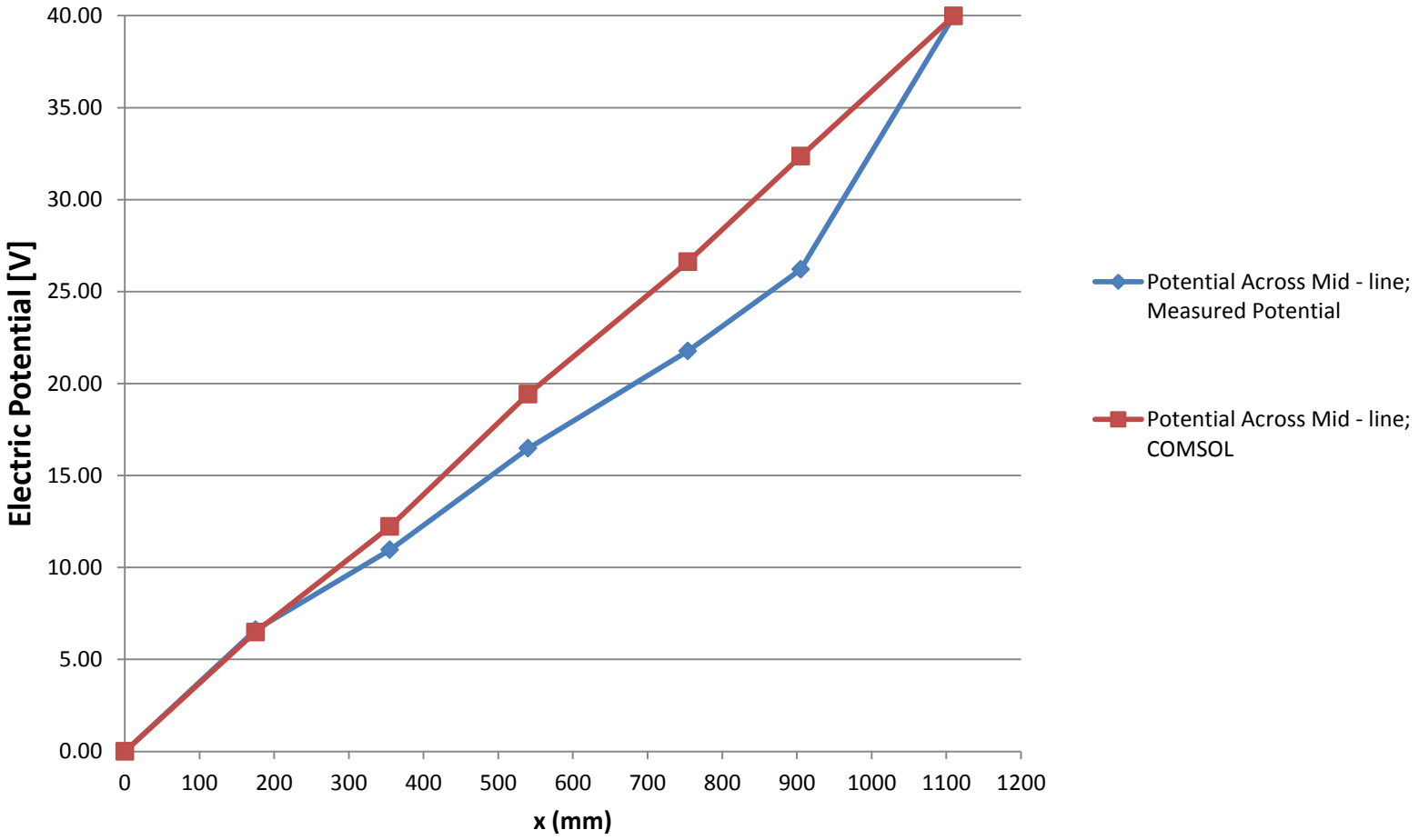

Electric potential across mid – line [V]

Measured Vs. Simulation

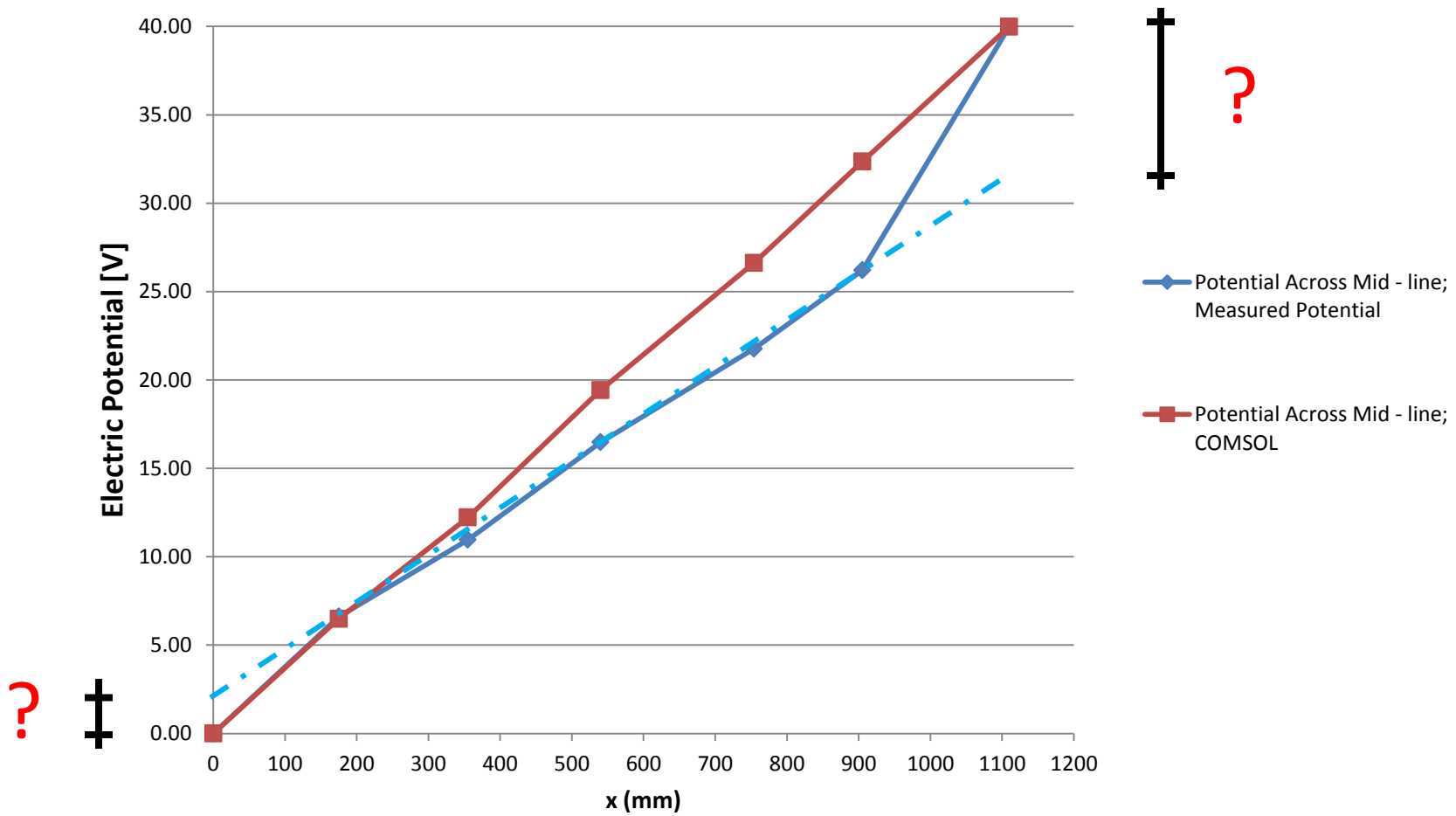

Electric potential across mid – line [V]

Measured Vs. Simulation

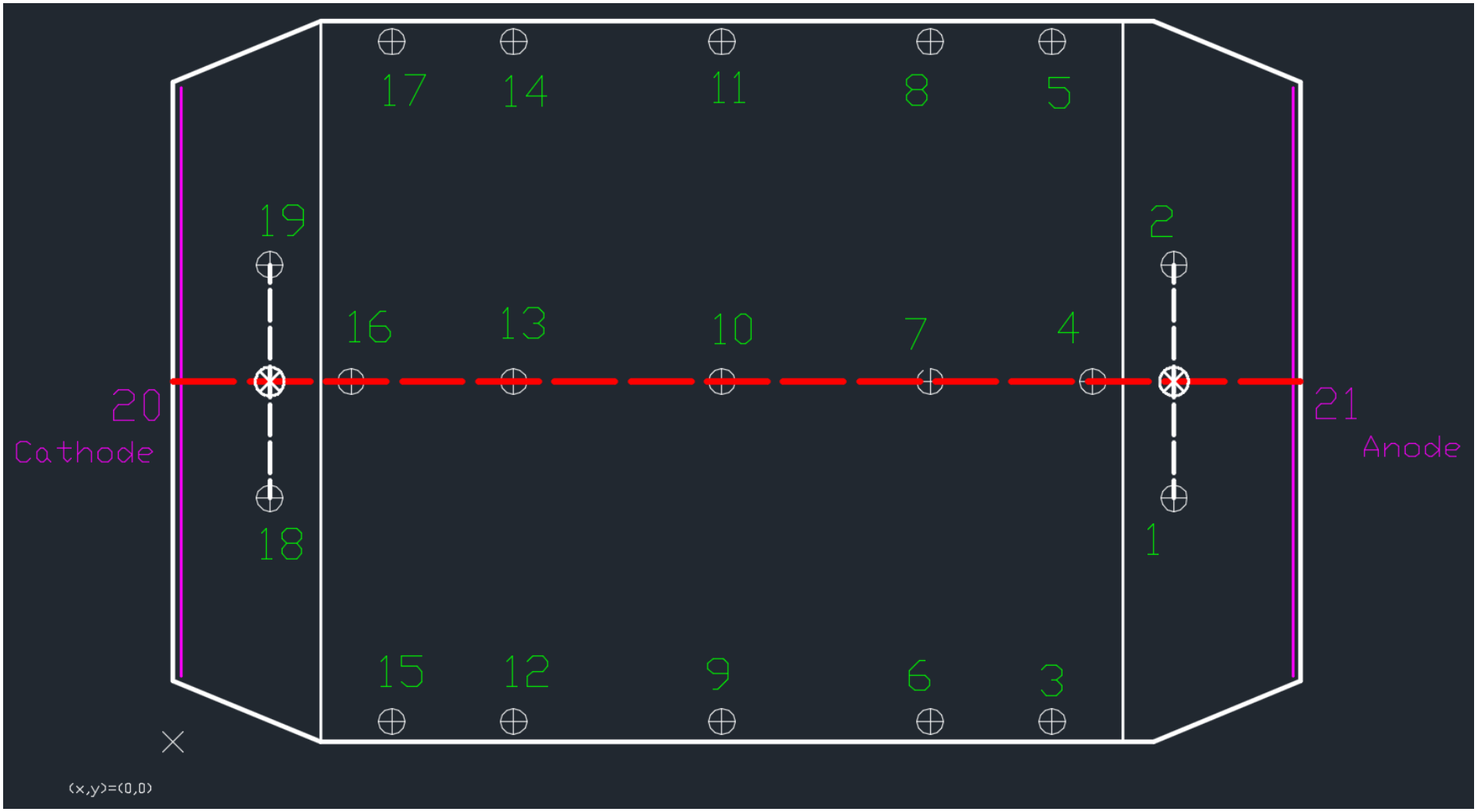

Measured Vs. Simulation

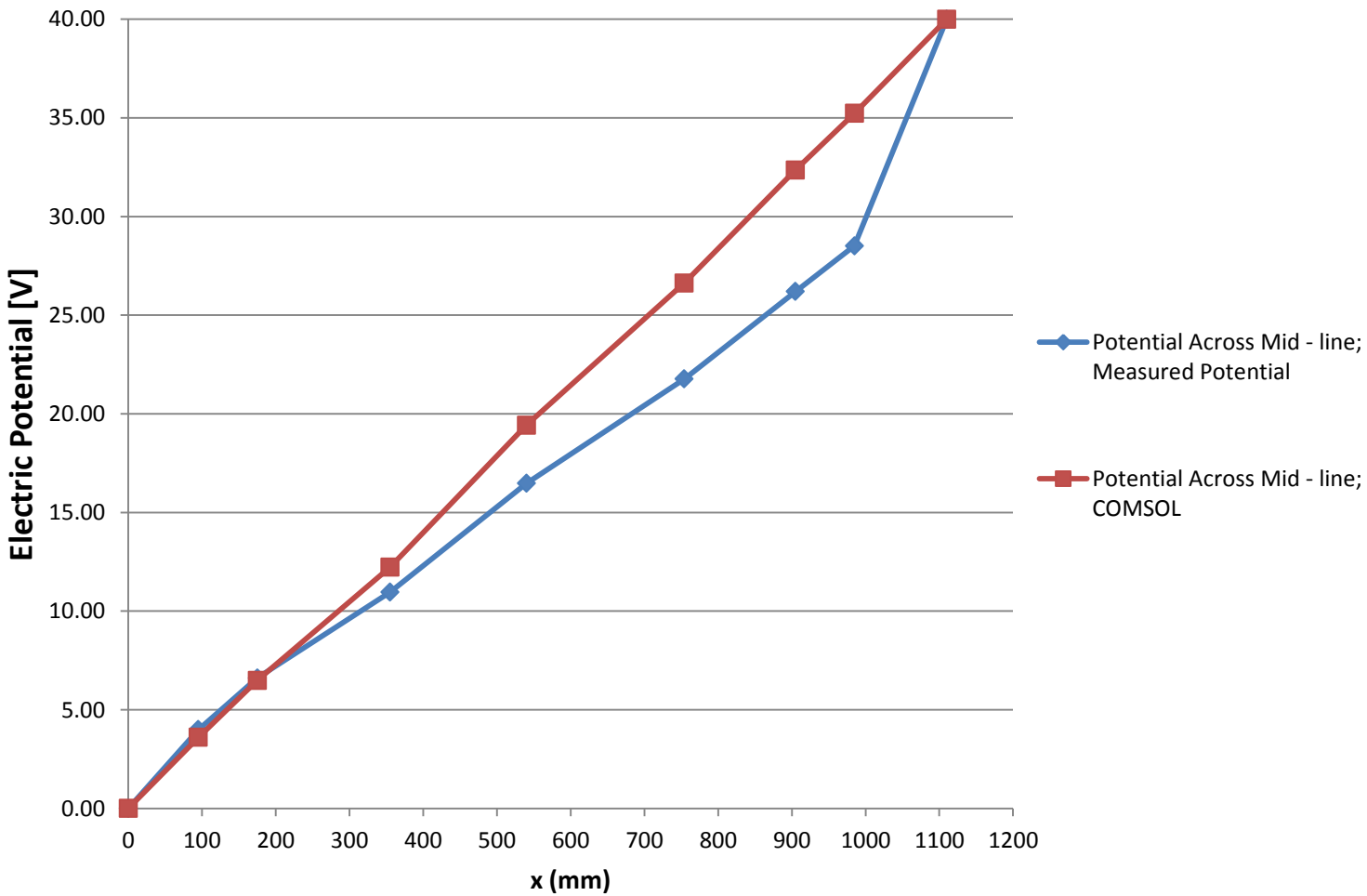

Electric potential across mid – line [V]. 2 more fictitious points added. They are calculated by taking the average value of the 2 passive electrodes located in the anodic chamber and the 2 passive electrodes located in the cathodic chamber.

Measured Vs. Simulation

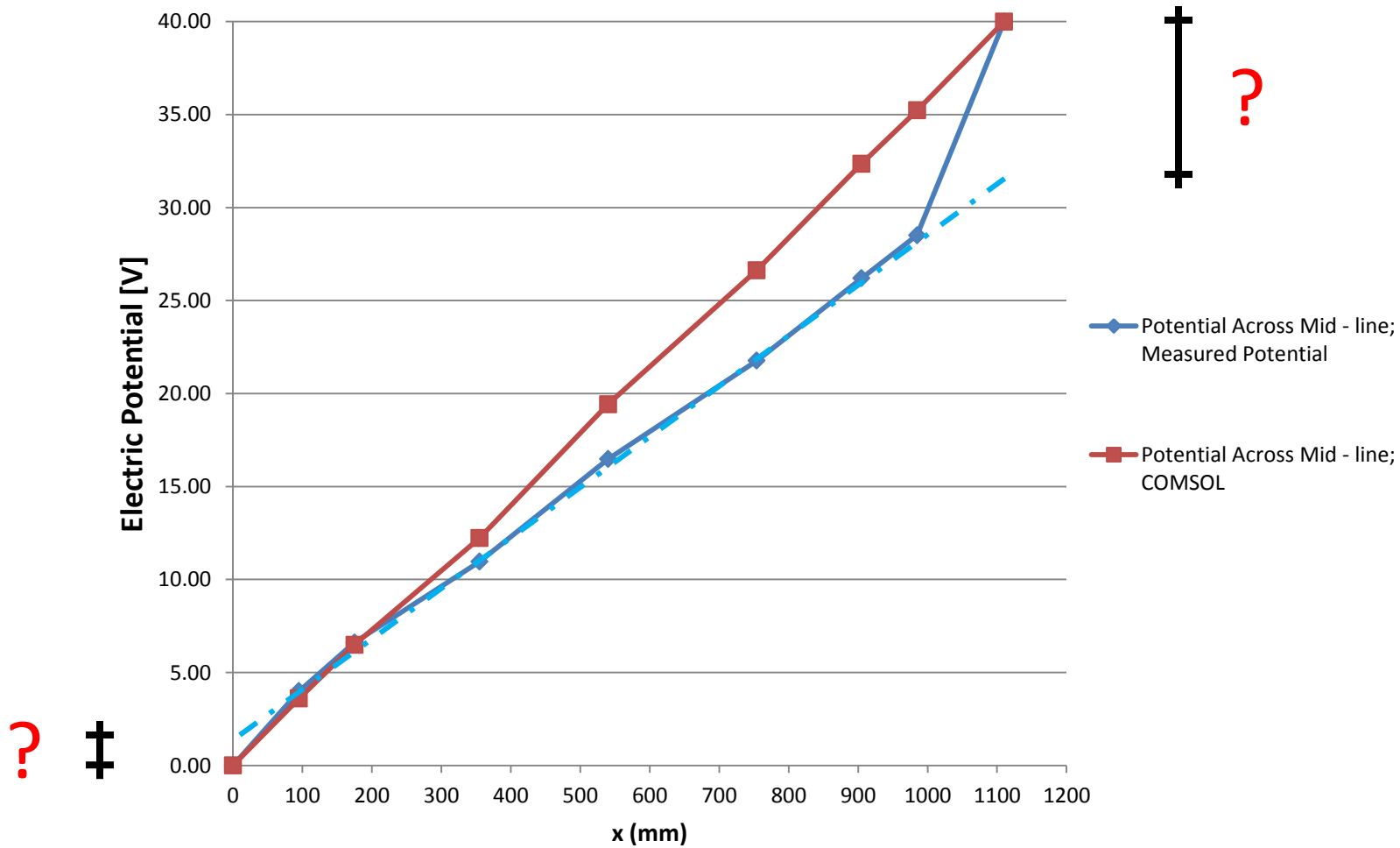

Electric potential across mid – line [V]. 2 more fictitious points added. They are calculated by taking the average value of the 2 passive electrodes located in the anodic chamber and the 2 passive electrodes located in the cathodic chamber.

Measured Vs. Simulation

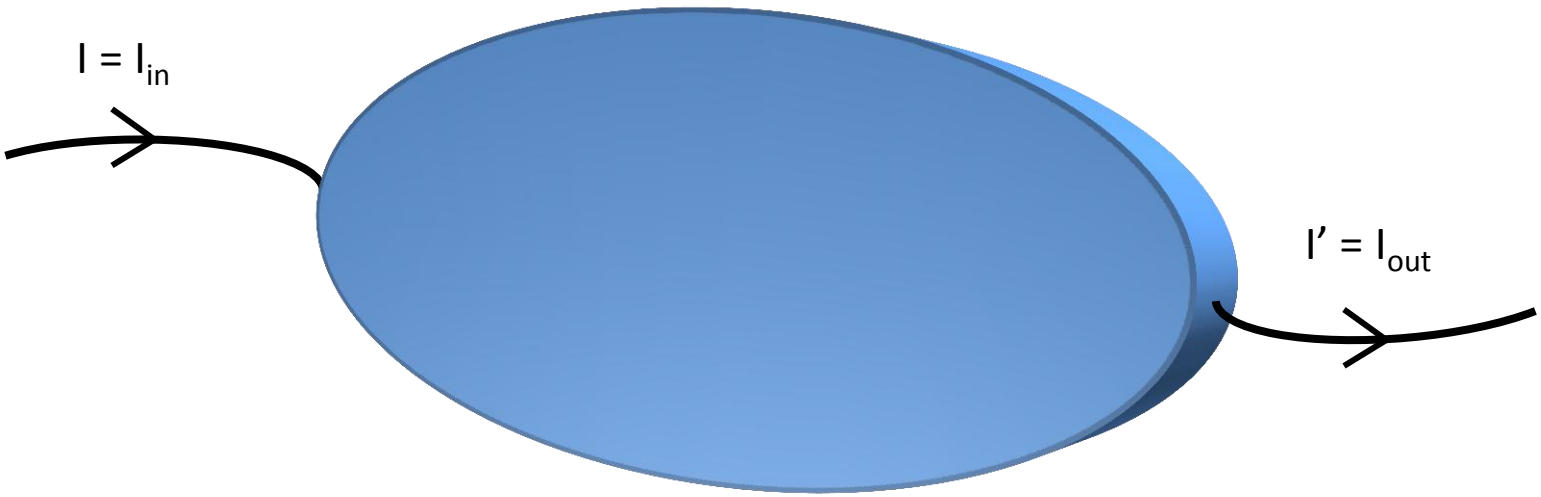

For steady currents: I = I'

I : Current [A]

Measured Vs. Simulation

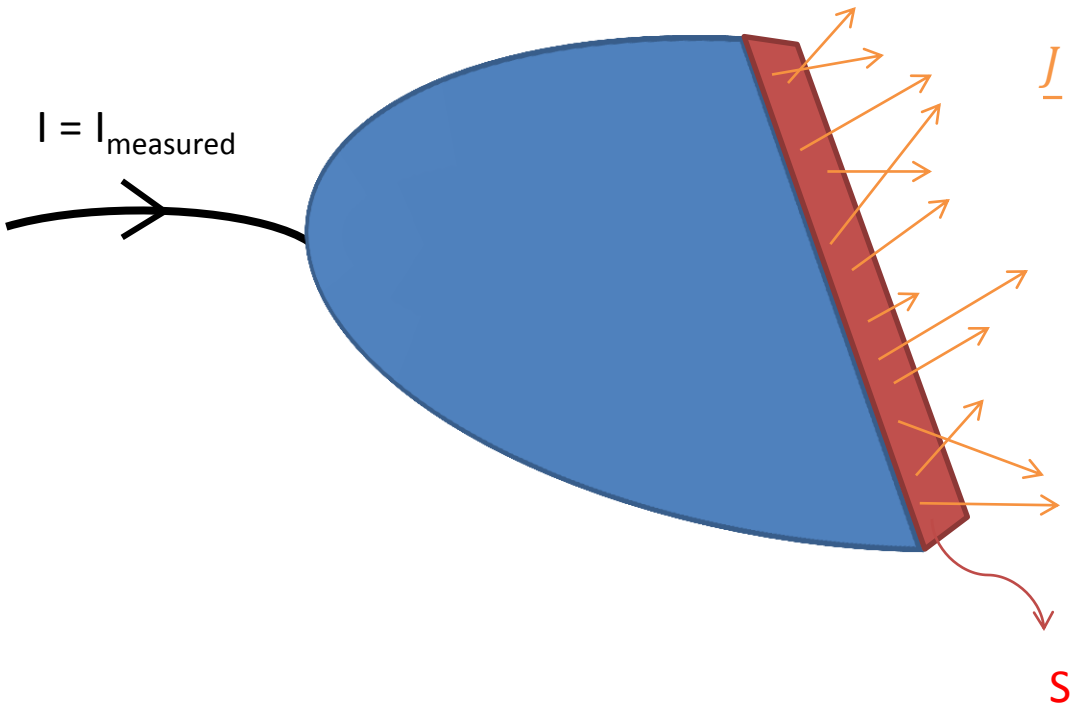

$\underline{J}$: Current density vector [A/m^2]

S : Area [m^2]

Measured Vs. Simulation

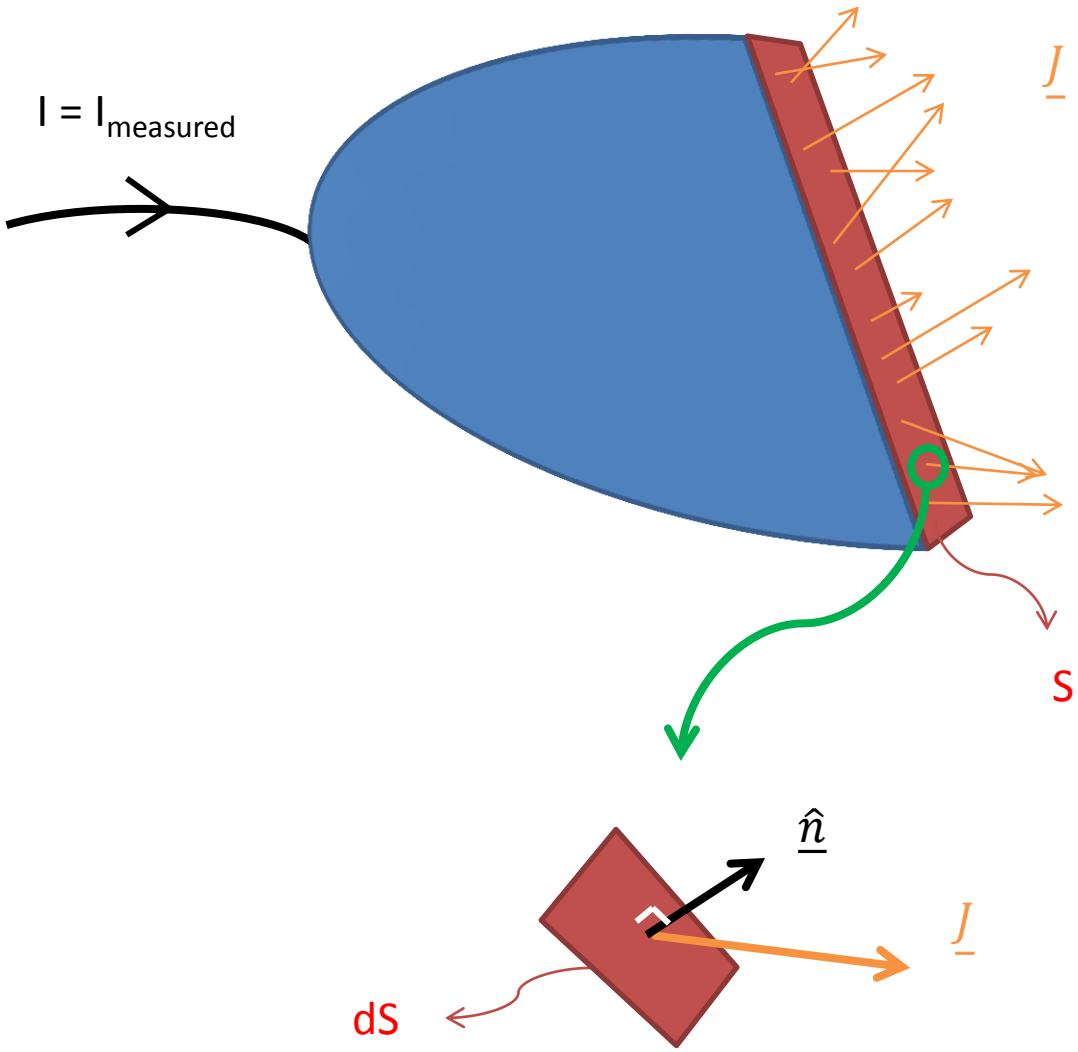

$$d\underline{S} = \underline{\hat{n}}\, dS$$

Measured Vs. Simulation

$$I = I_{measured} = 0{,}139 \quad [\mathrm{A}]$$

$$I = I_{simulation} = \iint_S \underline{J} \cdot \underline{dS}$$: Surface integral

$$\underline{J} = \begin{Bmatrix} J_x \\ J_y \\ J_z \end{Bmatrix} = J_x\, \underline{\hat{\imath}} + J_y\, \underline{\hat{\jmath}} + J_z\, \underline{\hat{k}}$$: Current density vector

$$\underline{\hat{\imath}} = \begin{Bmatrix} 1 \\ 0 \\ 0 \end{Bmatrix}, \qquad \underline{\hat{\jmath}} = \begin{Bmatrix} 0 \\ 1 \\ 0 \end{Bmatrix}, \qquad \underline{\hat{k}} = \begin{Bmatrix} 0 \\ 0 \\ 1 \end{Bmatrix}$$: Unit vectors in x, y, z direction respectively

J_x , J_y , J_z : Components of current density vector in x, y, z direction respectively. Units [A/m^2]

Measured Vs. Simulation

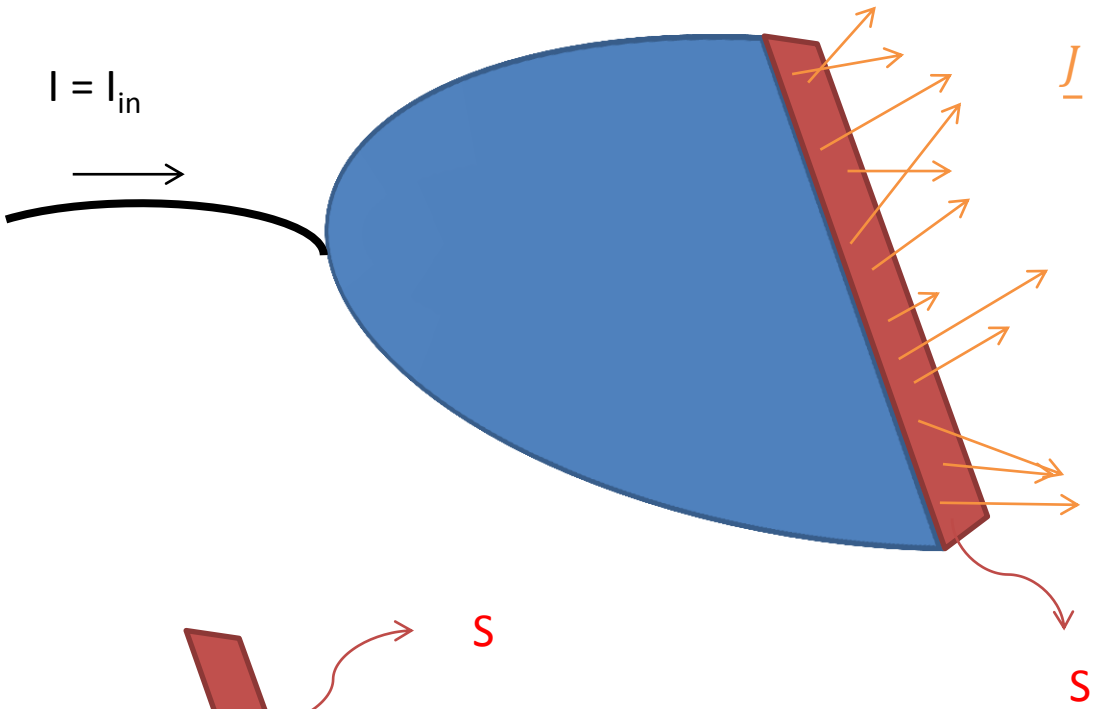

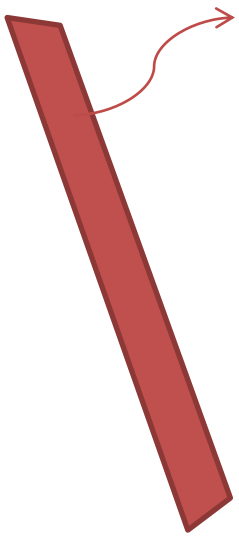

Area S defined as: $x = f(y, z)$

$$\therefore \quad \underline{dS} = \left(\underline{\hat{\imath}} - \frac{\partial f}{\partial y}\underline{\hat{\jmath}} - \frac{\partial f}{\partial z}\underline{\hat{k}}\right) dy\, dz$$

Measured Vs. Simulation

$$I = \iint_S \underline{J} \cdot \underline{dS}$$

$$I = \iint_S \left(J_x \, \underline{\hat{\imath}} + J_y \, \underline{\hat{\jmath}} + J_z \, \underline{\hat{k}} \right) \cdot \left(\underline{\hat{\imath}} - \frac{\partial f}{\partial y} \underline{\hat{\jmath}} - \frac{\partial f}{\partial z} \underline{\hat{k}} \right) dy \, dz$$

$$I = \iint_S \left(J_x \; - \frac{\partial f}{\partial y} J_y \; - \frac{\partial f}{\partial z} J_z \; \right) dy \, dz$$

Measured Vs. Simulation

$$x = f(y,z) = 0{,}935 \quad [m]$$

$$\frac{\partial f}{\partial y} = 0$$

$$\frac{\partial f}{\partial z} = 0$$

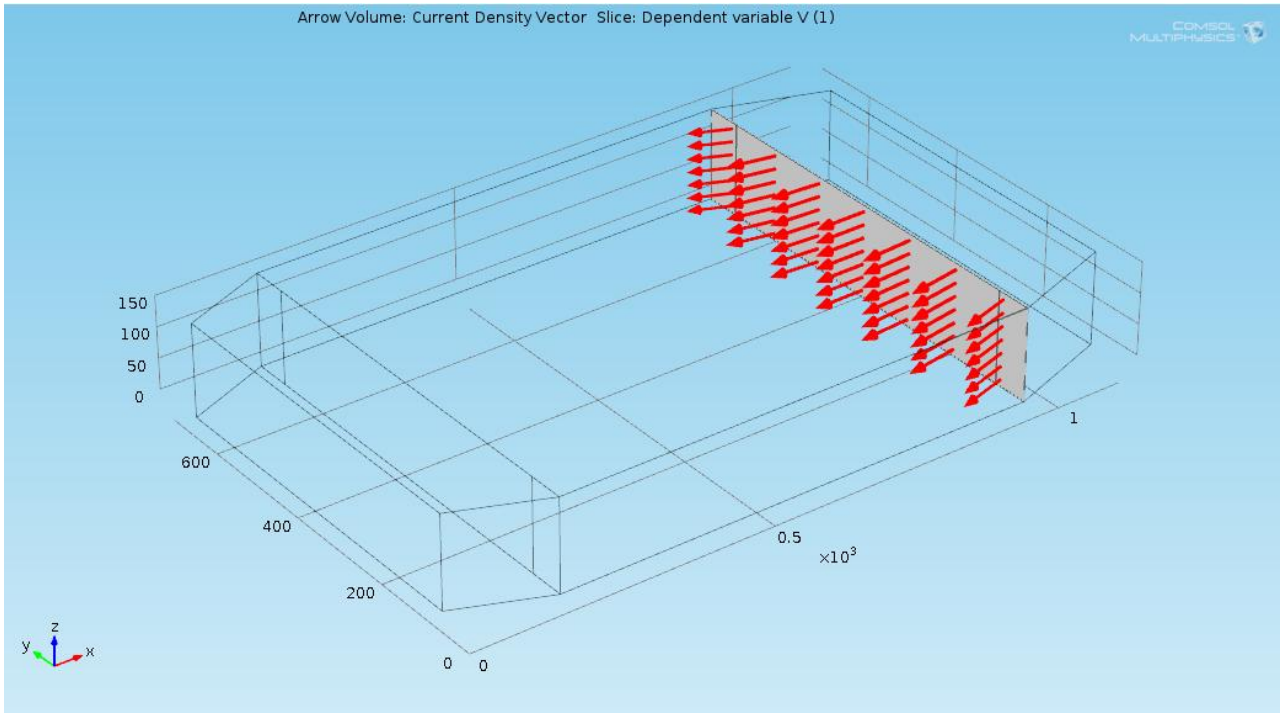

Current density vector $\underline{J}$ on y-z plane @ x = 0,935 [m]

$$\therefore \quad I = \iint_A J_x \, dy \, dz = \int_z \int_y J_x \, dy \, dz = \int_{z=0}^{z=0{,}15} \int_{y=0}^{y=0{,}71} J_x \, dy \, dz = -0{,}167 \; [A]$$

Measured Vs. Simulation

$I_{measured} = 0{,}139 \quad [\mathrm{A}]$ while $I_{simulation} = 0{,}167 \quad [\mathrm{A}]$

It seems that simulation overestimates the electric current by ~ 17 %. Even though the current resulting from the simulation is close to the one measured, the difference can be further explained if the underlying assumptions and simplifications of the model are closely examined. Moreover, the fact that the current resulting from the simulation is larger than the measured current comes as no surprise. The assumptions/ simplifications are presented in the following slides.

Measured Vs. Simulation

- <u>Area of the anode and the cathode</u>

In the model the length of the anode and the cathode is considered to be the entire length of the container wall (equal to 590 mm). However, as the anode and the cathode are separate titanium plates that have to fit in the custom-made guides, when ordering them from the manufacturer, plates with length of 580 mm were requested. This results in the model overestimating the dimensions of the electric potential source by ~ 1,7 %.

- <u>Electrical conductivity of tap water</u>

The electrical conductivity for the tap water is not a measured value. An average value provided from the water supplier company was used. It is quiet obvious that the actual electrical conductivity of the tap water we used might be different, especially considering that the water company reports the electrical conductivity only as a monthly average value for the different production sites throughout The Netherlands.

Measured Vs. Simulation

- <u>Polarization of the anode and the cathode</u>

When we apply an electric field externally (by means of the anode and cathode) the ions of the system react to this excitation. The ions with negative charge create a thin layer attached to the anode and the ions with positive charge will attach themselves to the cathode. These double layers that are created by the system as a reaction to the external excitation produce an electric field opposite to the one we apply. This results in an “effective” electric field that is less strong than the one applied. Since this secondary effect is not considered in the simulation, it is expected that the electric current resulting from the simulation is larger than the measured current.

- <u>Modelling of the geometry + precision/ sensitivity of measurements</u>

The geometrical irregularities (small curvatures, minor bending, etc.) of the container are not considered, as all the boundaries are modelled as straight lines. Also due to sensitivity issues, it is likely that the water height is not exactly 15,00 [cm].

Measured Vs. Simulation

- <u>Electrical conductivity (k) assumed constant</u>

One of the assumptions made is that the electrical conductivity of the medium is constant and equal to the electrical conductivity of the tap water. However, this assumption is not valid for the areas close to the anode and the cathode. Due to the reactions that take place at the anode and the cathode, there is gas generation. Even though the anodic and cathodic chambers are open, some gas remains attached to the anode and the cathode in the form of air bubbles inside the water. This means that the electrical conductivity of tap water $O(10^{-2})$ is valid for the largest area of the anode and the cathode, but a smaller area is covered with air which has electrical conductivity $O(10^{-15})$. As this effect is not considered in the simulation, the measured electric current is expected to be smaller than the electric current resulting from the simulation.