HEIG-VD / Hes-so

Magnetocaloric elements with thermoelectric switches:

Magneto-Thermodynamics of Layered Beds

Peter W. Egolf, Laurent Gravier, Didier Vuarnoz*

University of Applied Sciences of Western Switzerland

* Kobe University, Kobe, Japan

A personal statement

We are not competitive enough with present developments (good efficiency is possible, but too high cost)!

Demand:

5 x higher magnetocaloric effect of materials

or

5 x higher frequency of the machines

Thermal switch technology

Advantage: Constant fluid flows with alternating cold/heat inputs (no carry over leckage, no fluid switches)

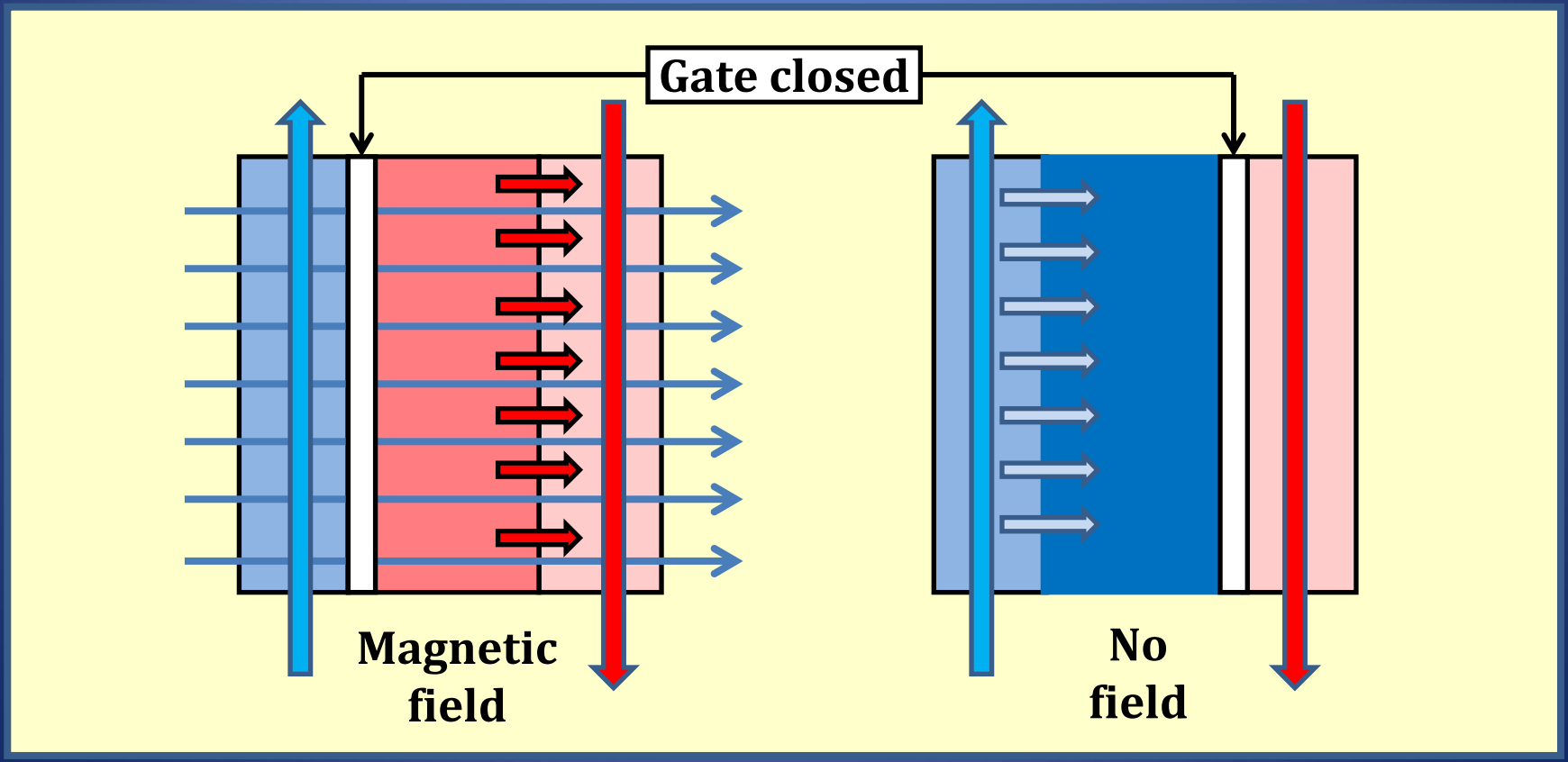

Three basic elements

1) Thermoelectric switches

2) Micro channel heat exchangers

3) Magneto caloric layered bed (Delft Days 2011)

Full presentation 1) to 3):
THERMAG V
Grenoble/Annecy
17-21 September 2012

Thermoelectric switches

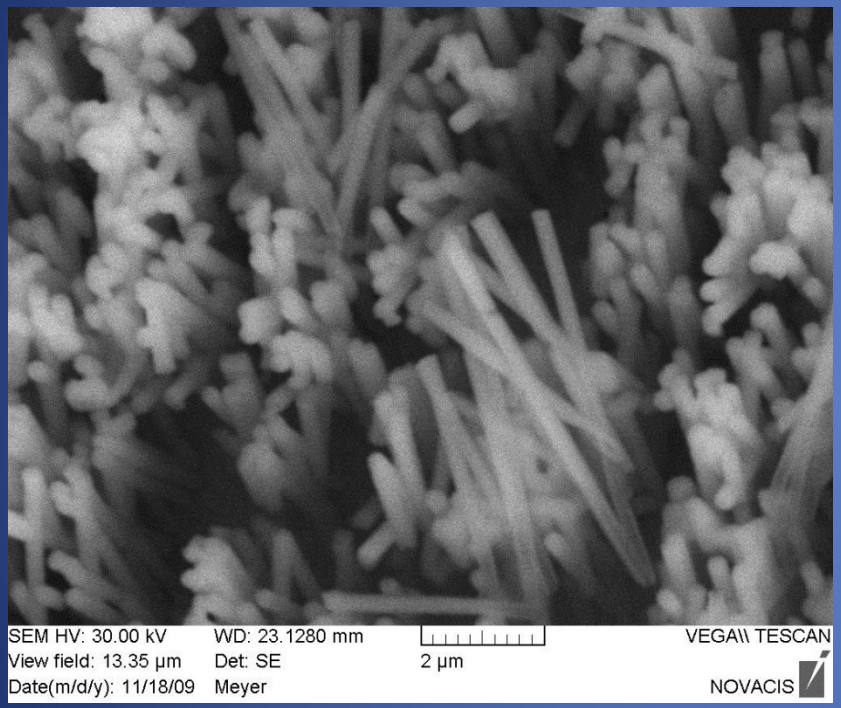

Characteristic diameter of the Ni wires is 200 nm

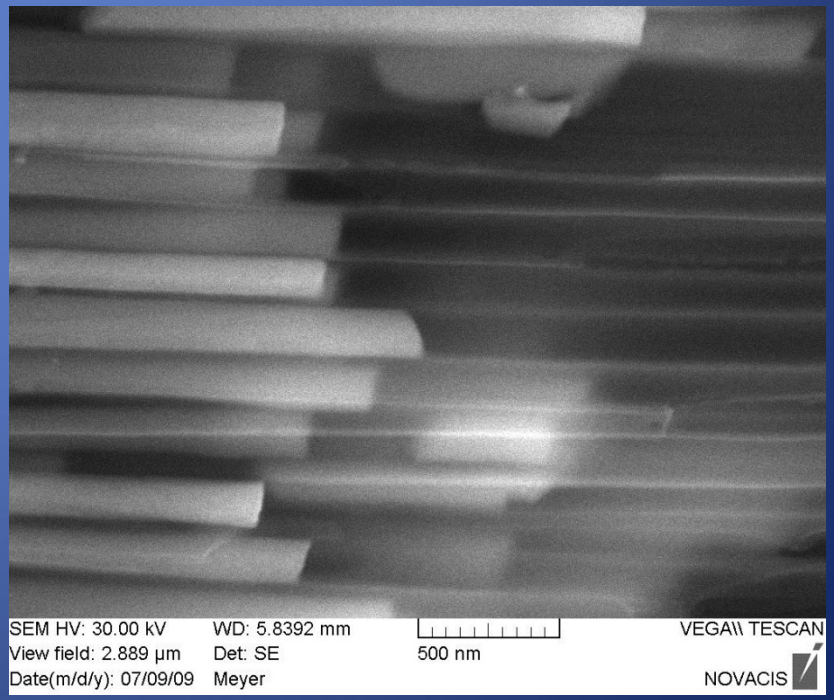

SME: Dr. Anne-Gabrielle Pawlowski, MNT

Micro channel heat exchangers

Kitanovski and Egolf, Int. J. Refr. 33 (3), 449-464:

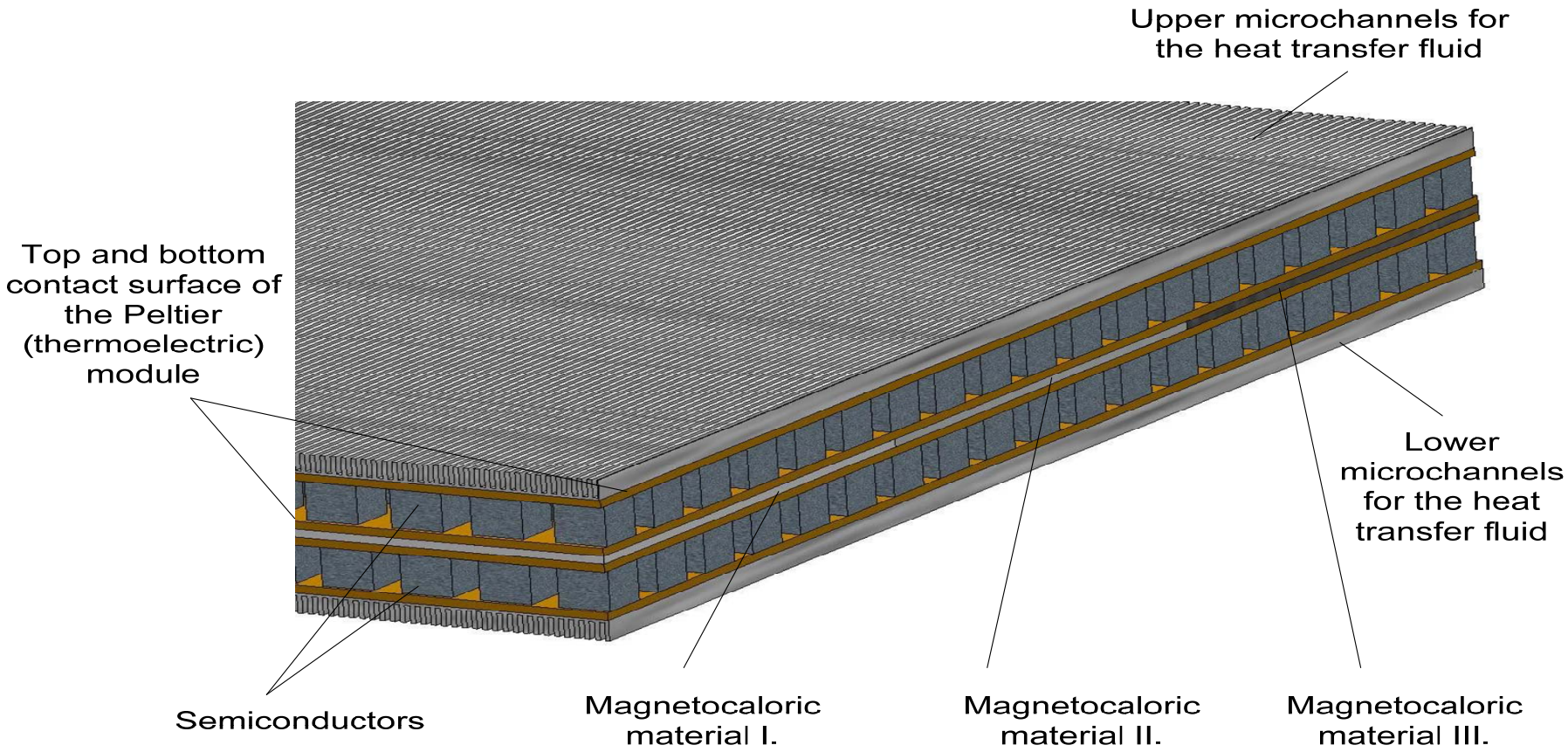

Varying Curie temperature

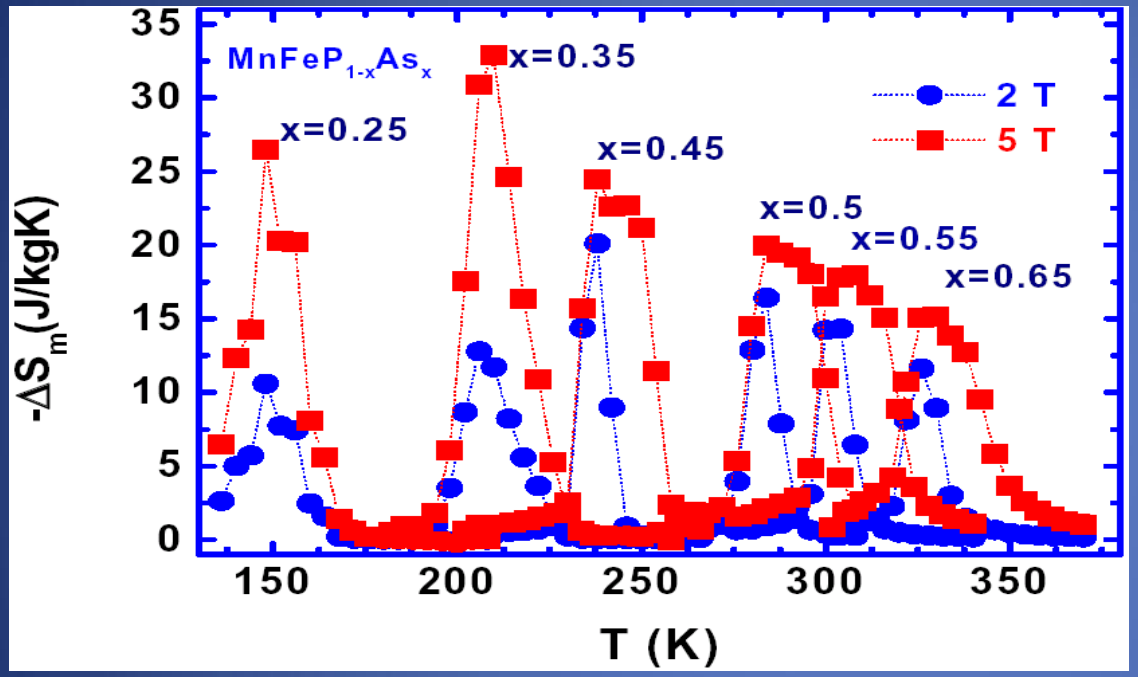

A manganese based magneto caloric material showing a giant magneto caloric effect.

The alteration of the stoechiometric ratio of phosphor and arsenic leads to a shift of the Curie temperature (PhD O. Tegus, Univ. Amsterdam, with permission by Ekkes Brück).

Model of magneto caloric layered bed

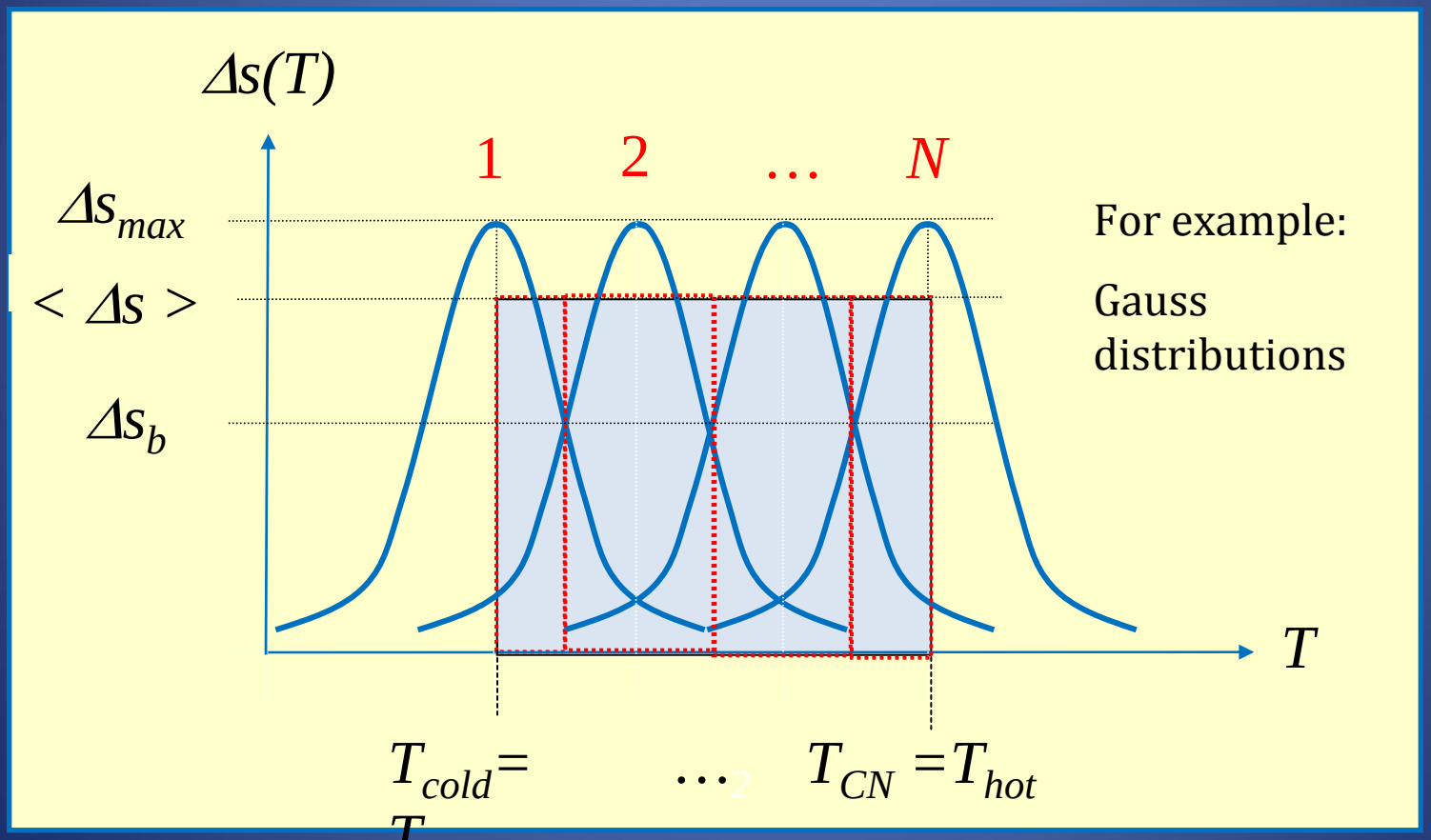

The *T-s-z* diagram

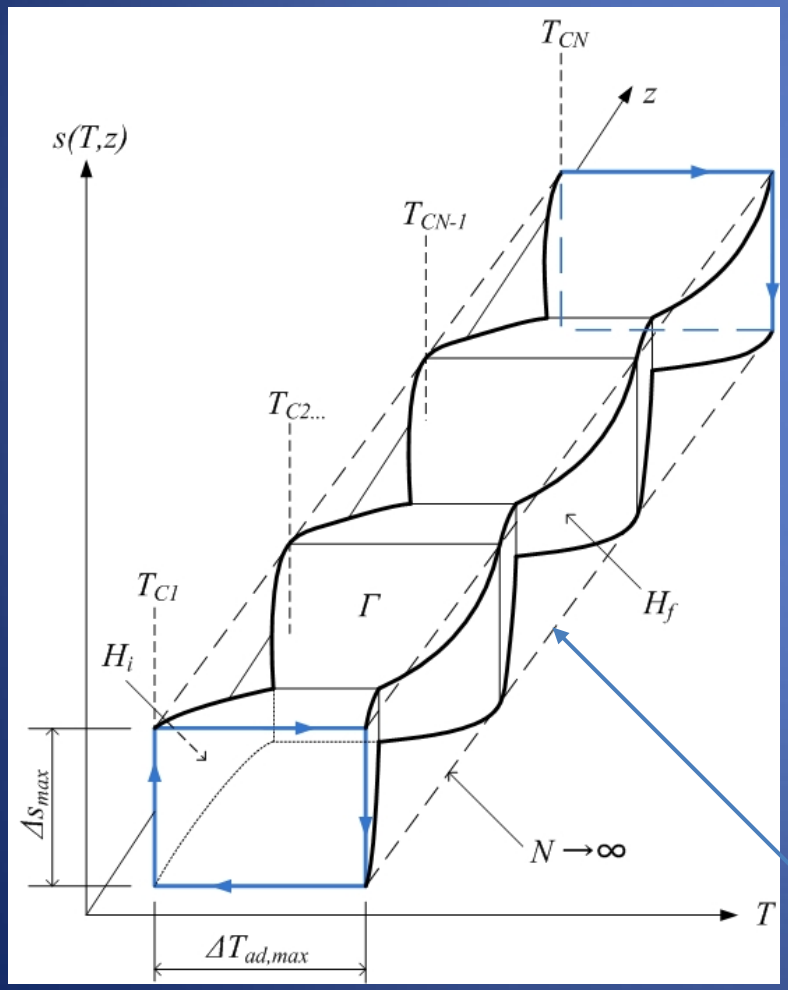

Here a thermodynamic cycle of a magnetic heat pump, respectively refrigerator is presented. A layered bed is described by a body with a certain number of contractions and enlargements. The largest cross sections are obtained at the Curie points.

Maximal (or average) value

Is the T-S diagram appropriate?

Case: A

T=const

s=const

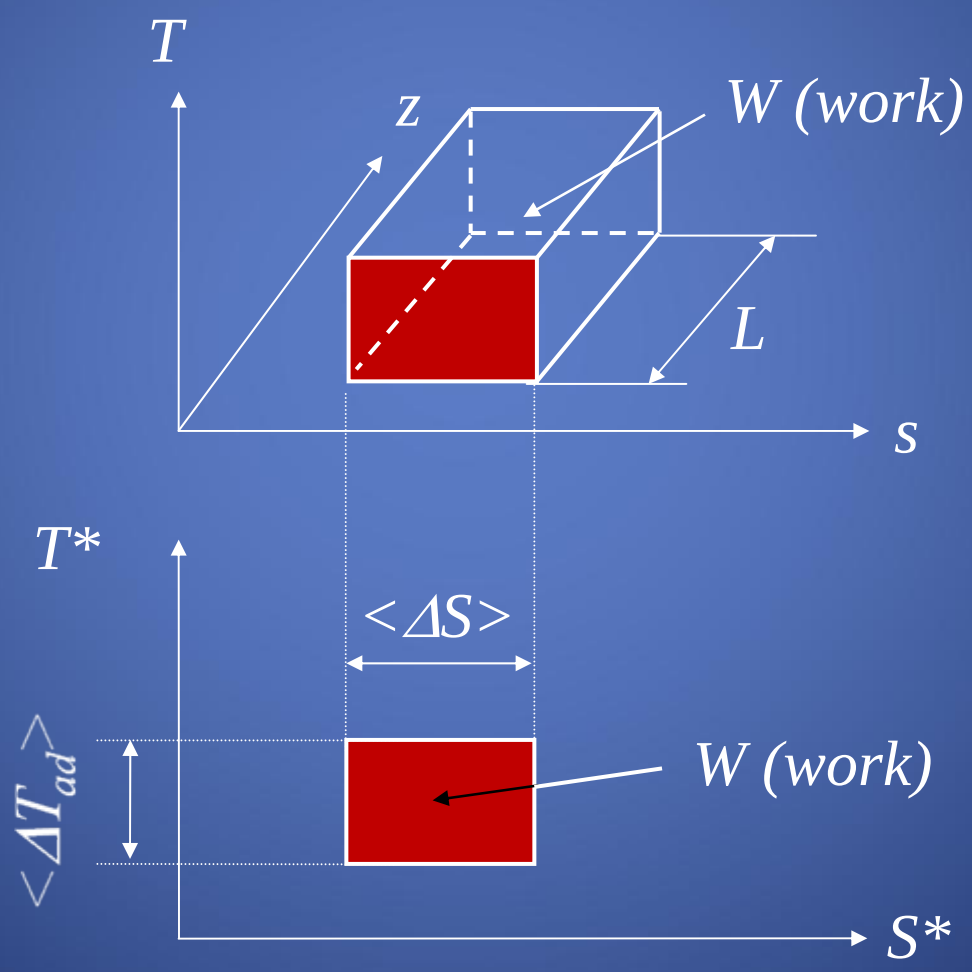

In this simplest case: Yes!

Is the T-S diagram appropriate?

In this case: No !

Case B:

T=const

$s \neq$const

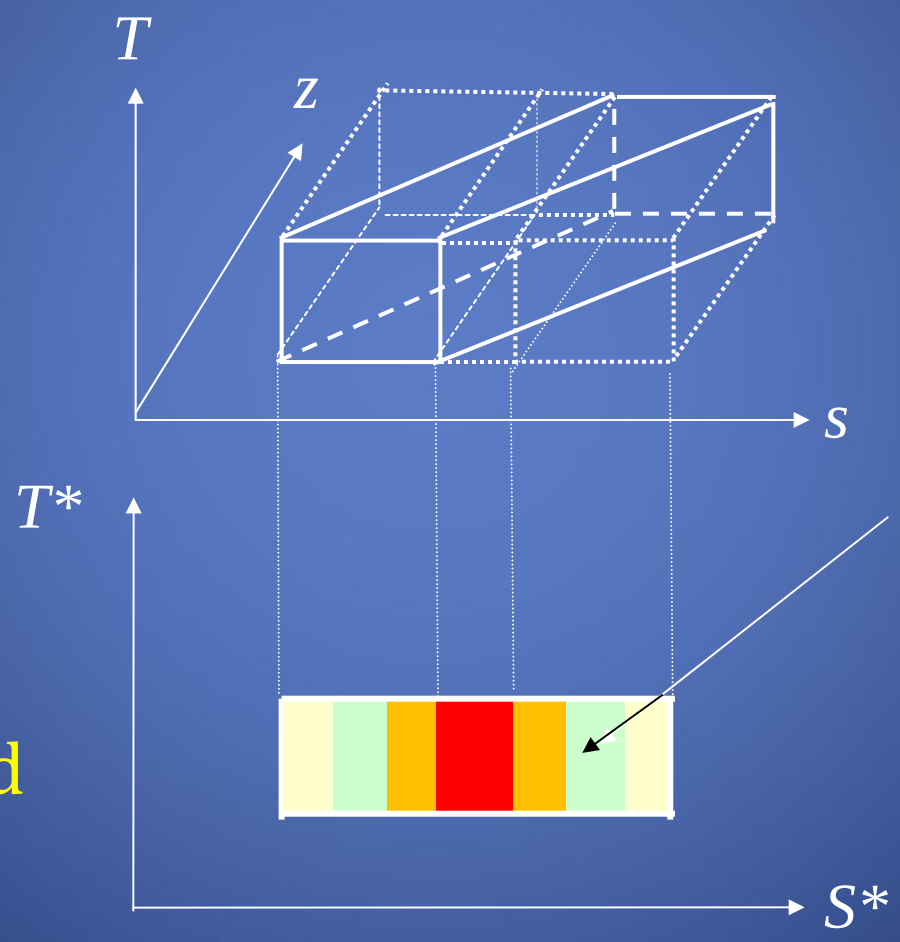

Work W is larger!

Weights w^*:

- w^*=0.0-0.2
- w^*=0.2-0.4
- w^*=0.4-0.6
- w^*=0.6-0.8
- w^*=0.8-1.0

Integration and not projection!

Proposal: T^*-S^* diagram

<u>Case C:</u>

$T \neq$ const

s=const

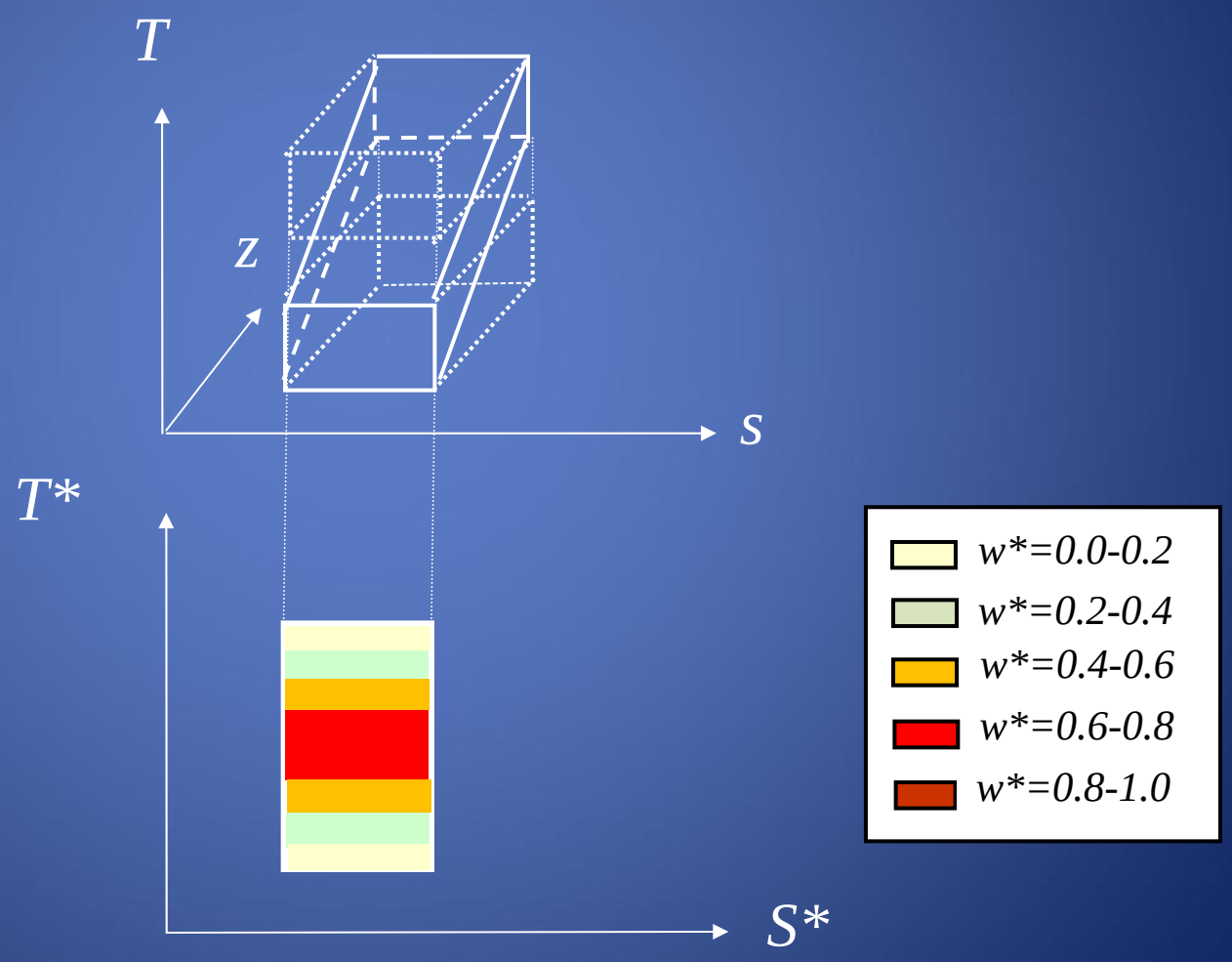

Isoline weight distribution

Case D:

$T \neq \text{const}$

$s \neq \text{const}$

$T(z)$ is usually even not linear!

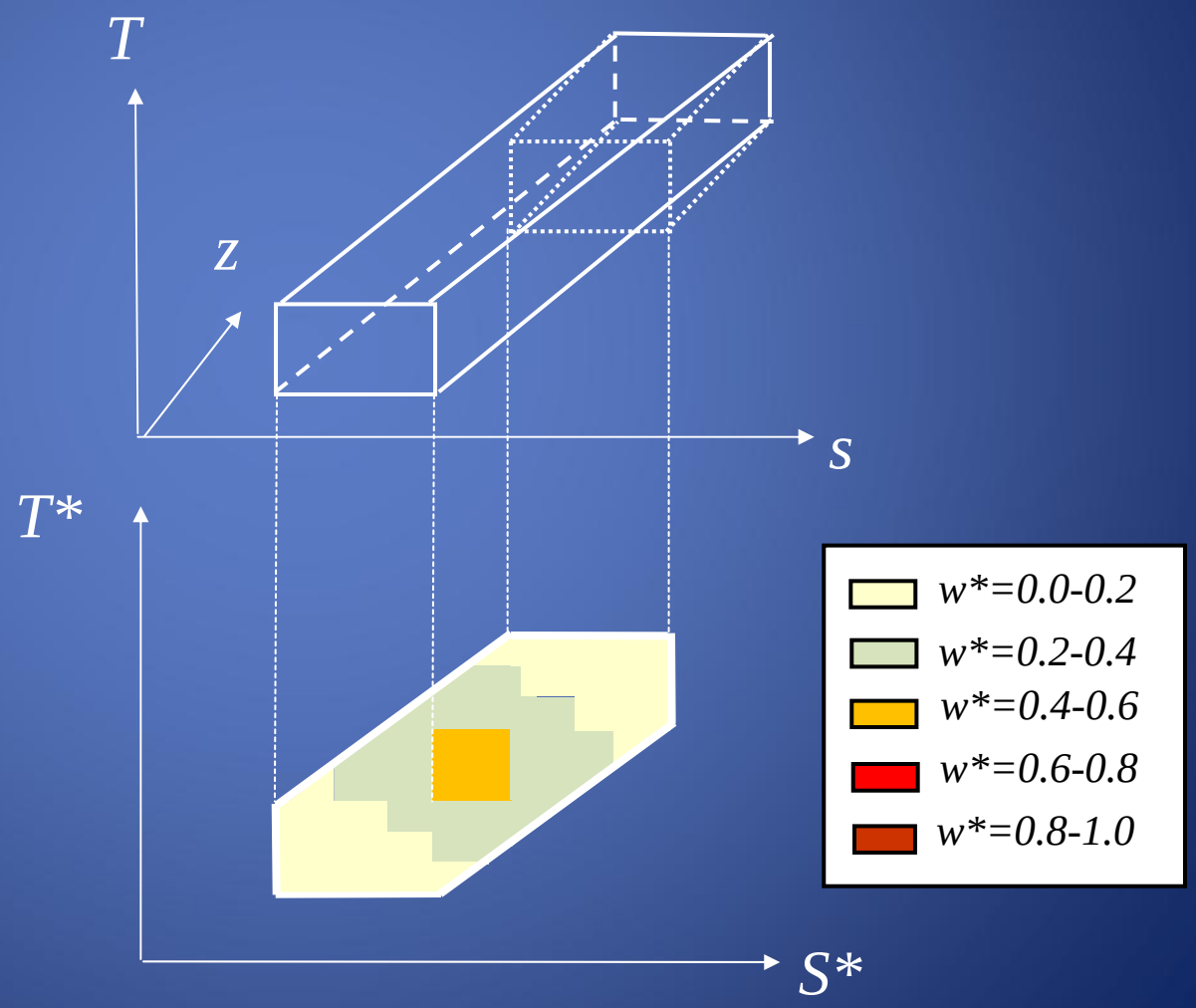

Isoline weight distribution

$$W = \iint_{\partial\Gamma} T\, dS = \iint_{\partial\Gamma^*} w^*(S^*, T^*) T^*\, dS^*, \qquad S^* \le S, \forall S$$

$\partial\Gamma*$ is the enclosed domain in the projected *T-s-z* diagram *T*-S*,* where the weight distribution *w*(T*, S*) is* applied.

Thermodynamics for a single layer

The work performed*:

$$W = A\int_0^L \Delta T_{ad}(z)\cdot\Delta s(z)dz$$

Full correlation:

$$W = V < \Delta T_{ad} > \cdot < \Delta s >$$

The heat Q (heat pump application):

$$Q = A\int_0^L \left[T(z) + \Delta T_{ad}(z)\right]\Delta s(z)dz$$

* Symmetry perpendicular to downstream direction!

Thermodynamics for a single layer

This is identical to:

$$Q = V < T > \cdot < \Delta s > + W$$

Taylor approximation* at the Curie temperature:

$$T(z) = T_{in} + \left.\frac{dT}{ds}\right|_{T_C} \{s[H_i, T(z)] - s[H_i, T_{in}]\} + O\left\langle \{s[H_i, T(z)] - s[H_i, T_{in}]\}^2 \right\rangle$$

With:

$$< s[H_i, T(z)] - s[H_i, T_{in}] > = \frac{s[H_i, T(L)] - s[H_i, T(0)]}{2} = \frac{< \Delta s >}{2}$$

* Approximation is possible because of many thin layers!

Thermodynamics for a single layer

This is identical to:

$$Q = V\left[< T_{in} > + \frac{\beta}{2} \ < \Delta s(z) > \right] \cdot < \Delta s(z) > + \ W, \qquad \beta = \left. \frac{dT}{ds} \right|_{T_C}$$

Now the *COP* of a single layer of a heat pump is:

$$< COP > = \frac{< Q >}{< W >} = \frac{< T_{in} > + \frac{\beta}{2} < \Delta s > + < \Delta T_{ad} >}{< \Delta T_{ad} >} = \frac{< T_{in} >}{< \Delta T_{ad} >} + \frac{\beta}{2} \frac{< \Delta s >}{< \Delta T_{ad} >} + 1$$

Thermodynamics for multiple layers

A layered bed with N layers (special case) leads to*:

$$< T_{out} > - < T_{in} > = N < \Delta T_{ad} >$$

Similar as before, one obtains:

$$< COP > = \frac{V_N}{V}\left(\frac{< T_{in} >}{< \Delta T_{ad} >} + \frac{\beta}{2}\frac{< \Delta s >}{< \Delta T_{ad} >}\right) + \frac{N\,V_N}{V}$$

In the case of a linear $T(z)$ dependence:

$$V_N = \frac{V}{N} \qquad \Rightarrow \qquad < COP > = \frac{1}{N}\left(\frac{< T_{in} >}{< \Delta T_{ad} >} + \frac{\beta}{2}\frac{< \Delta s >}{< \Delta T_{ad} >}\right) + 1$$

* By adapting Δs_b one can obtain an integer number N!

Thermodynamics for multiple layered bed

In the case of an infinite number of layers and a finite ΔT_{ad}:

$$< COP >= \frac{1}{N}\left(\frac{< T_{in} >}{< \Delta T_{ad} >} + \frac{\beta}{2}\frac{< \Delta s >}{< \Delta T_{ad} >}\right) + 1, \qquad \lim_{N \to \infty} < COP >= 1$$

the heat pump degenerates to an electric heater!

In the special case that β=0:

$$< COP >= \frac{< T_{in} > + N < \Delta T_{ad} >}{N < \Delta T_{ad} >} = \frac{< T_{out} >}{< T_{out} > - < T_{in} >} = < COP_{Carnot} >$$

Thermodynamics for multiple layered bed

The simple special case:

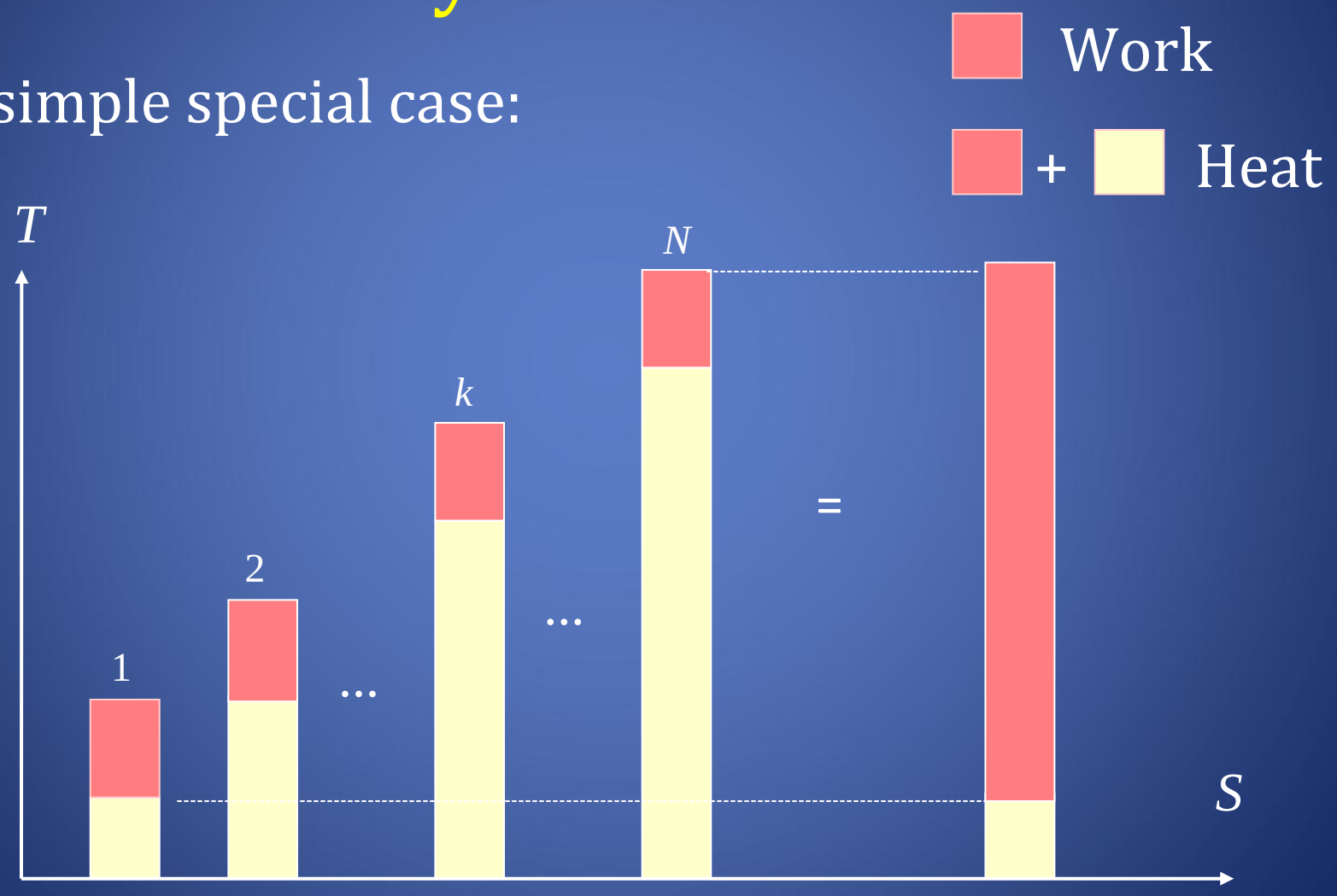

Conclusions and outlook

1) A generalized T^*-s^* diagram is proposed containing a weight distribution $w^*(T^*,S^*)$
2) N layers of a layered bed act as a cascade of N smaller refrigerators, respectively heat pumps
3) The layered bed technique doesn't lead to lower efficiency (COP)
4) The layered bed technique leads to larger magnet assemblies, volume and prize
5) We can counterbalance this with stronger MCE or higher frequencies f of the thermodynamic process